IS1U60/IS1U60L

Sensors with 1-Package Design of Remote Control Detecting Functions owing to OPIC

■ Features

1. 1-package design owing to adoption of OPIC
2. Compact
   (Volume : About 1/8 compared with **GP1U58X**)
3. B.P.F. (Band Pass Frequency) : (TYP. 38kHz)
4. Aspherical lens

■ Applications

1. Audio equipment
2. Cameras

■ Outline Dimensions

(Unit : mm)

IS1U60

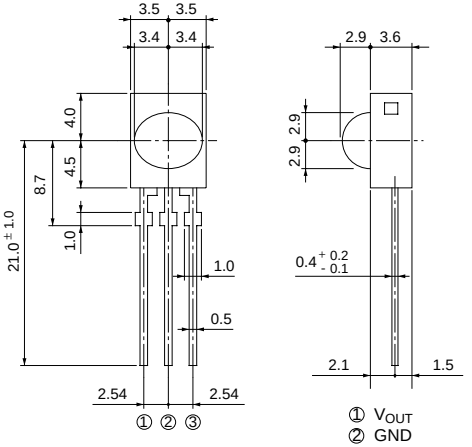

* Tolerance : ± 0.2

IS1U60L

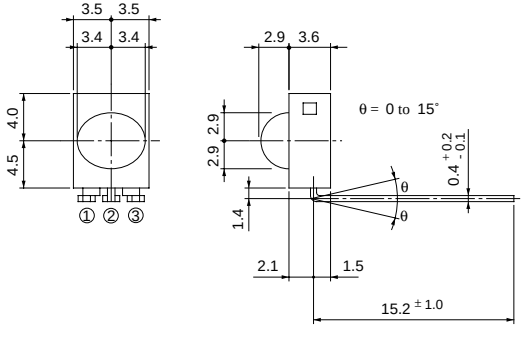

* Tolerance : ± 0.2

* "OPIC" (Optical IC) is a trademark of the SHARP Corporation.
An OPIC consists of a light-detecting element and signal-processing circuit integrated onto a single chip.

■ Absolute Maximum Ratings

(Ta=25˚C)

Parameter	Symbol	Rating	Unit
Supply voltage	V_{CC}	0 to 6.0	V
*1Operating temperature	T_{opr}	- 10 to + 60	˚C
Storage temperature	T_{stg}	- 20 to + 70	˚C
*2Soldering temperature	T_{sol}	260	˚C

*1 No dew condensation is allowed.
*2 For 5 seconds

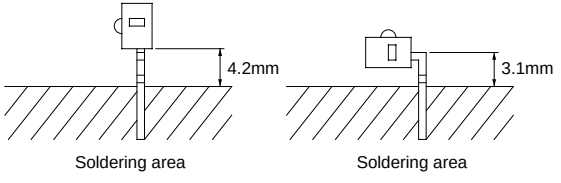

■ Recommended Operating Conditions

Parameter	Symbol	Recommended operating conditions	Unit
Operating supply voltage	V_{CC}	4.7 to 5.3	V

" In the absence of confirmation by device specification sheets, SHARP takes no responsibility for any defects that occur in equipment using any of SHARP's devices, shown in catalogs, data books, etc. Contact SHARP in order to obtain the latest version of the device specification sheets before using any SHARP's device."

■ Electrical Characteristics

(Ta=25˚C, V_{CC} =+5V)

Parameter	Symbol	Conditions	MIN.	TYP.	MAX.	Unit
Dissipation current	I_{CC}	No input light	-	2.8	4.5	mA
High level output voltage	V_{OH}	*3, Output terminal OPEN	V_{CC}- 0.2	-	-	V
Low level output voltage	V_{OL}	*3, *4	-	0.45	0.6	V
High level pulse width	T_1	*3	400	-	800	μs
Low level pulse width	T_2		400	-	800	μs
B.P.F. center frequency	f_O		-	38	-	kHz
Linear ultimate distance	L	ϕ , θ = 0˚, E_e < 10 lx	5.0	-	-	m
Linear ultimate distance	L_1	ϕ = ± 30˚ (θ = 0˚) θ = ± 15˚ (ϕ = 0˚) E_e < 10 lx	3.0	-	-	m

*3 The burst wave as shown in the following figure shall be transmitted.
*4 Pull-up resistance : 2.2kΩ
*5 By SHARP transmitter

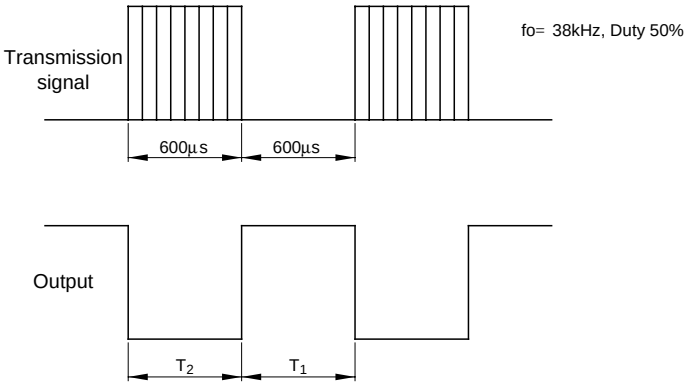

■ Internal Block Diagram

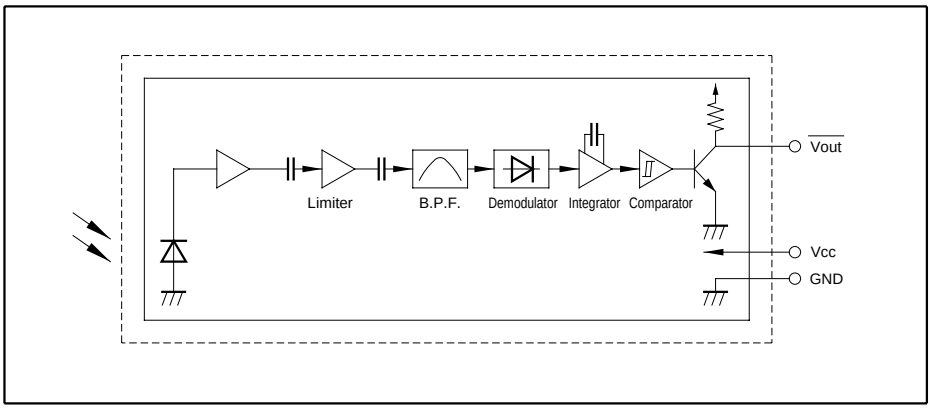

■ Performance

Using the transmitter shown in Fig. 1, the output signal of the light detecting unit is good enough to meet the following items in the standard optical system in Fig. 2.

(1) Linear reception distance characteristics

When L=0.2 to 5 m, Ee < 10 lx (*4) and ϕ =0° in Fig. 2, the output signal shall meet the electrical characteristics in the attached list.

(2) Sensitivity angle reception distance characteristics

When L=0.2 to 3 m, Ee < 10 lx (*4) and ϕ<= 30 ° in the direction X and θ =0° in the direction Y in Fig. 2, the output signal shall meet the electrical characteristics in the attached list Further, the electrical characteristics shall be met when L=0.2 to 5 m, Ee < 10 lx (*4) and ϕ =0° in the direction X and θ<= 15° in the direction Y.

*4 It refers to detector face illuminance.

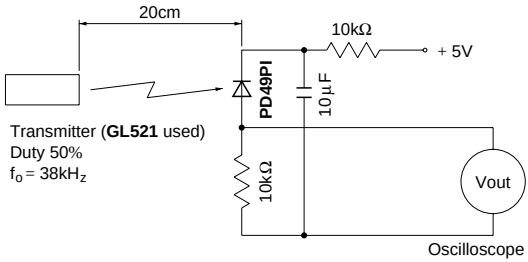

Fig. 1 Transmitter

In the above figure, the transmitter should be set so that the output Vout can be $40mV_{P-P}$.

However, the **PD49PI** to be used here should be of the short-circuit current I_{SC}=2.6μA at Ev=100 lx.

(Ev is an illuminance by CIE standard light source A (tungsten lamp).)

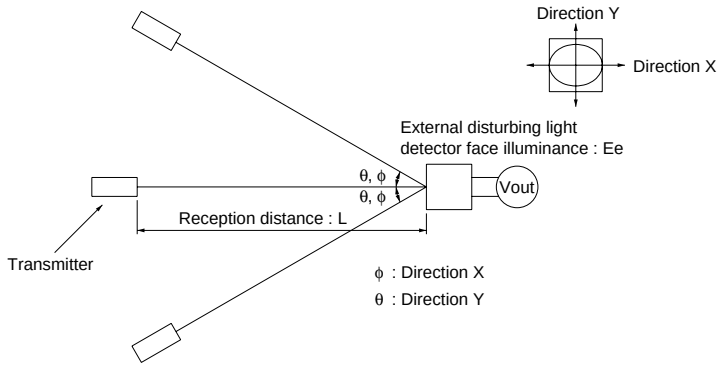

Fig. 2 Standard optical system

Fig. 1 B.P.F. Frequency Characteristics (TYP.)

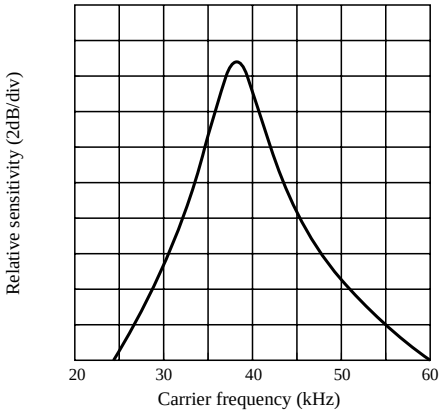

Fig. 2 Sensitivity Angle (Direction X) Characteristics (TYP.) for Reference

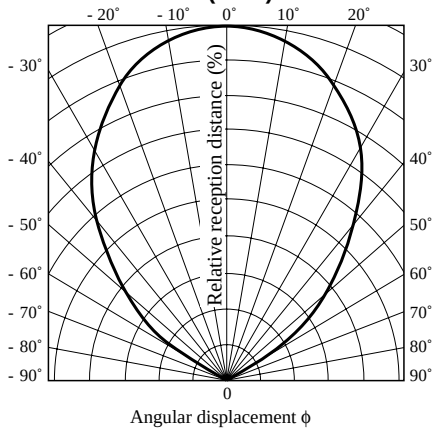

Fig. 3 Sensitivity Angle (Direction Y) Characteristics (TYP.) for Reference

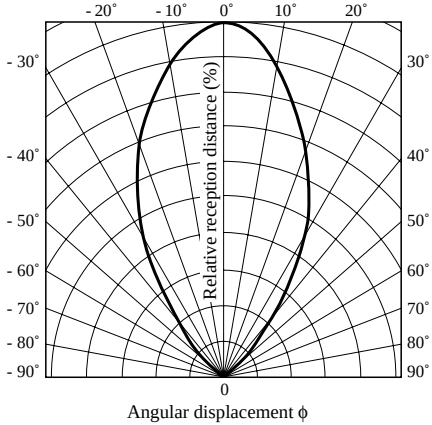

Fig. 4 Relative Reception Distance vs. Ambient Temperature (TYP.) for Reference

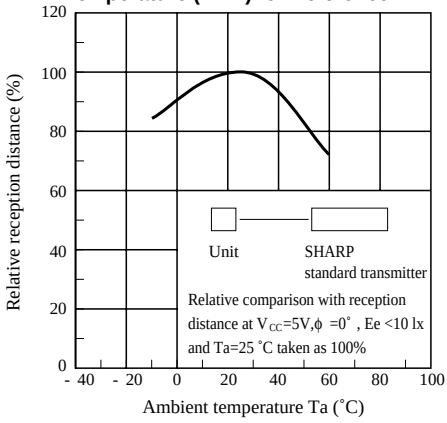

Fig. 5 AEHA (Japan Association of Electrical Home Appliances) Code Pulse Width Characteristics (1st Bit) (TYP.) for Reference

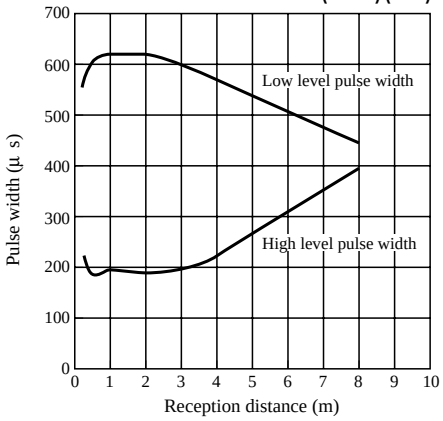

(Conditions)

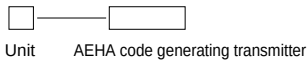

V_{CC}=5V, Ta=RT, ϕ =0˚, Ee < 10 lx

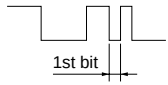

T= 430 μ s

Fig. 6 Spectral Sensitivity for Reference

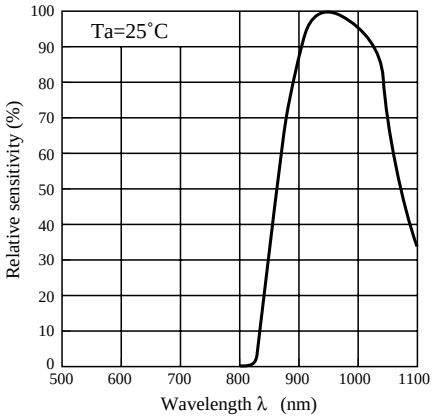

■ Precautions for Operation

(1) Use the light emitting unit (remote control transmitter), in consideration of performance, characteristics, operating conditions of light emitting device and the characteristics of the light detecting unit.

(2) Pay attention to a malfunction of the light detecting unit when the surface is stained with dust and refuse.
Care must be taken not to touch the light detector surface.

• Conduct cleaning as follows.

(3) Cleaning

Solvent dip cleaning : Solvent temperature of 45 ˚C max., dipping time : Within 3 minutes

Ultrasonic cleaning : Elements are affected differently depending on the size of cleaning bath, ultrasonic output, time, size of PWB and mounting method of elements.
Conduct trial cleaning on actual operating conditions in advance to make sure that no problem results.

• Use the following solvents only.

Solvents : Ethyl alcohol, methyl alcohol or isopropyl alcohol

(4) To avoid the electrostatic breakdown of IC, handle the unit under the condition of grounding with human body, soldering iron, etc.

(5) Do not apply unnecessary force to the terminal.

(6) Example of recommended external circuit (mount outer mounting parts near the sensor as much as possible.)

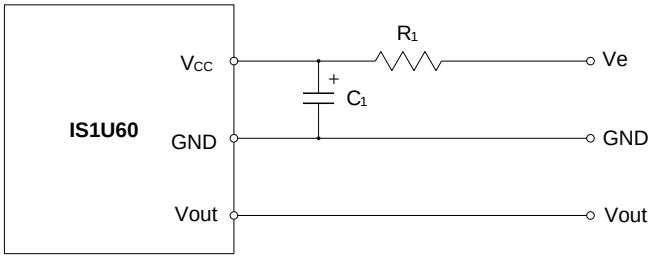

(Circuit constant)
R_1 = 47Ω ± 5%
C_1 = 47µF