IGS278

Inductive sensor

IGK3015-BPKG/K1/US-104

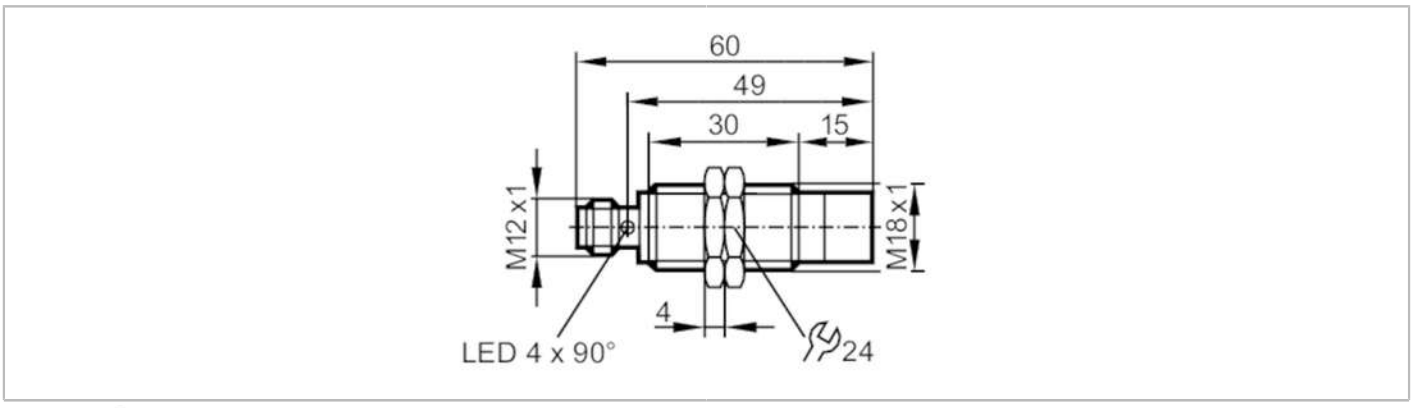

Product characteristics		
Electrical design		PNP
Output function		normally open
Sensing range	[mm]	15
Housing		threaded type
Dimensions	[mm]	M18 x 1 / L = 60
Application		
Special feature		Gold-plated contacts; Increased sensing range; Correction factor K = 1; Magnetic-field immune
Application		Suitable for industrial, mobile, cooling and lubricating applications; Industrial applications / factory automation
Magnetic-field immune		yes
Max. magnetic field immunity	[mT]	300
Electrical data		
Operating voltage	[V]	10...30 DC
Current consumption	[mA]	< 20
Protection class		III
Reverse polarity protection		yes
Outputs		
Electrical design		PNP
Output function		normally open
Max. voltage drop switching output DC	[V]	2.5
Permanent current rating of switching output DC	[mA]	100
Switching frequency DC	[Hz]	2000
Short-circuit protection		yes
Overload protection		yes
Detection zone		
Sensing range	[mm]	15
Real sensing range Sr	[mm]	15 ± 10 %
Operating distance	[mm]	0...12.15

IGS278

Inductive sensor

IGK3015-BPKG/K1/US-104

Increased sensing range			yes
Accuracy / deviations			
Correction factor			steel: 1 / stainless steel: 1 / brass: 1 / aluminium: 1 / copper: 1
Hysteresis	[% of Sr]		3...15
Switch point drift	[% of Sr]		-10...10
Correction factor K = 1			yes
Operating conditions			
Ambient temperature	[°C]		-40...85
Protection			IP 65; IP 66; IP 67; IP 68; IP 69K
Tests / approvals			
EMC		EN 61000-4-2 ESD	4 kV CD / 8 kV AD
		EN 61000-4-3 HF radiated	10 V/m
		EN 61000-4-4 Burst	2 kV
		EN 61000-4-6 HF conducted	10 V
		EN 55011	class B
Vibration resistance		EN 60068-2-6 Fc	20 g 11 ms half-sine; 3 shocks each in every direction of the 3 coordinate axes
Shock resistance		EN 60068-2-27 Ea	100 g 11 ms half-sine; 3 shocks each in every direction of the 3 coordinate axes
Continuous shock resistance		EN 60068-2-27	40 g 6 ms; 4000 shocks each in every direction of the 3 coordinate axes
Fast temperature change		EN 60068-2-14 Na	TA = -40 °C; TB = 85 °C; t1 = 30 min; t2 = < 10 s; 50 cycles
Salt spray test		EN 60068-2-52 Kb	severity level 5 (4 test cycles)
MTTF	[years]		465
Embedded software included			yes
UL approval		Ta	-25...70 °C
		Enclosure type	Type 1
		power supply	Limited Voltage/Current
		UL Approval no.	A005
		File number UL	E174191
Mechanical data			
Weight	[g]		43.1
Housing			threaded type
Mounting			non-flush mountable
Dimensions	[mm]		M18 x 1 / L = 60
Thread designation			M18 x 1
Materials			brass white bronze coated; sensing face: LCP white; LED window: PEI; lock nuts: brass white bronze coated
Displays / operating elements			
Display		switching status	4 x LED, yellow
Accessories			
Items supplied			lock nuts: 2
Remarks			
Pack quantity			1 pcs.

IGS278

Inductive sensor

IGK3015-BPKG/K1/US-104

Electrical connection - plug

Connector: 1 x M12; coding: A; Contacts: gold-plated

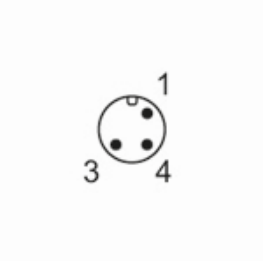

Connection

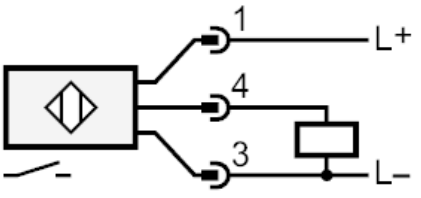

Diagrams and graphs

Installation

