Incremental Shaft Encoders Type RI 58

Industrial types



Synchro flange



Clamping flange

- Universal industry standard encoder
- Up to 40,000 steps with 10,000 pulses
- High signal accuracy
- Protection class up to IP 67
- Operating temperature up to 100 °C (RI 58-T)
- Flexible due to many flange and configuration variants
- Suitable for high shock ratings
- Application e.g.: Machine tools, CNC axles, packing machines, motors/drives, injection moulding machines, sawing machines, textile machines
- For EX version, see RX 70-I

NUMBER OF PULSES

RI 58-O

1 / 2 / 3 / 4 / 5 / 10 / 15 / 20 / 25 / 29 / 30 / 35 / 40 / 50 / 60 / 64 / 70 / 72 / 80 / 100 / 117 / 120 / 125 / 127 / 128 / 136 / 144 / 150 / 180 / 200 / 226 / 230 / 250 / 256 / 280 / 300 / 314 / 350 / 356 / 360 / 375 / 400 / 460 / 480 / 500 / 512 / 600 / 625 / 635 / 720 / 750 / 889 / 900 / 942 / 1,000 / 1,024 / 1,125 / 1,200 / 1,250 / 1,270 / 1,500 / 1,600 / 1,800 / 1,885 / 1,979 / 2,000 / 2,048 / 2,400 / 2,500 / 3,000 / 3,400 / 3,480 / 3,600 / 3,750 / 3,925 / 3,958 / 3,968 / 4,000 / 4,096 / 4,445 / 4,800 / 5,000 / 5,400 / 6,000 / 6,875 / 7,200 / 7,680 / 7,854 / 8,000 / 8,192 / 9,000 / 10,000
other numbers of pulses available on request.

RI 58-T

(high temperature): as above, but only for the range from 4 ... 2,500 pulses
other numbers of pulses available on request.

TECHNICAL DATA
mechanical

Shaft diameter	6 mm/6.35 mm/7 mm/12 mm/10 mm/9.52 mm	
Absolute max. shaft load radial / axial	Ø 12 mm	180/140 N (39/30 lbs)
	Ø 7...10 mm	160/107 N (35/24 lbs)
	Ø 6 mm/6.35 mm	110/60 N (24/13 lbs)
Absolute maximum speed	10,000 RPM	
Torque	≤ 0.5 Ncm (IP 65), ≤ 1 Ncm (IP 67)	
Moment of inertia	synchro flange 14 gcm² approx.	
	clamping flange 20 gcm² approx.	
Protection class (EN 60529)	Housing IP 65, bearings IP 64	
	Housing IP 67, bearings IP 67	
Operating temperature	RI 58-O: –10 ... +70 °C; RI 58-T: -25 ... +100 °C	
Storage temperature	RI 58-O: –25 ... +85 °C; RI 58-T: -25 ... +100 °C	
Vibration proof (IEC 68-2-6)	100 m/s² (10 ... 2000 Hz)	
Shock resistance (IEC 68-2-27)	1,000 m/s² (6 ms)	
Type of connection	1.5 m cable [1] or connector, axial or radial	
Housing	aluminium Ø 58 mm	
Flange	S = synchro flange, K = clamping flange,	
	G, Q = square flange, M = synchro clamping flange	
Weight	360 g approx.	
Bearing life	1 x 10^{10} revolutions (typ.) at 35 % of full rated shaft load	
	1 x 10^{9} revolutions (typ.) at 75 % of full rated shaft load	
	1 x 10^{8} revolutions (typ.) at 100 % of full rated shaft load	
	For example 30,000 h at 6,000 RPM with	
	a 13 lb radial load (10 mm or 9.52 mm shaft)	

[1] Other cable lengths on request

Industrial types

TECHNICAL DATA
electrical

General design	as per DIN VDE 0160, protection class III, contamination level 2, overvoltage class II	
Supply voltage (SELV)	with RS 422 + Sense (T):	5 VDC ± 10 %
	with RS 422 + Alarm (R):	5 VDC ± 10 % oder 10 ... 30 VDC [1]
	with push-pull (K, I):	10 ... 30 VDC [1]
Power consumption	40 mA (5 VDC), 60 mA (10 VDC), 30 mA (24 VDC)	
Standard-Output versions [2]	RS 422 (R):	A, B, N, $\overline{A}$, $\overline{B}$, $\overline{N}$, $\overline{Alarm}$
	RS 422 (T):	A, B, N, $\overline{A}$, $\overline{B}$, $\overline{N}$, Sense
	push-pull (K):	A, B, N, $\overline{Alarm}$
	push-pull complementary (I):	A, B, N, $\overline{A}$, $\overline{B}$, $\overline{N}$, $\overline{Alarm}$

[1] Pole protection with supply voltage 10...30 VDC
[2] Output description and technical data see section „output".

CONNECTION DIAGRAM CABLE PVC

cable PVC	Output		
(A, B)	RS 422	push-pull	push-pull
Colour	(R, T)	(K)	complementary (I)
red	5/10...30 VDC=	10...30 VDC=	10...30 VDC=
yellow/red	Sense V_{CC}		Sense V_{CC}
white	Channel A	Channel A	Channel A
white/brown	Channel $\overline{A}$		Channel $\overline{A}$
green	Channel B	Channel B	Channel B
green/brown	Channel $\overline{B}$		Channel $\overline{B}$
yellow	Channel N	Channel N	Channel N
yellow/brown	Channel $\overline{N}$		Channel $\overline{N}$
black	GND	GND	GND
yellow/black	$\overline{Alarm}$/Sense GND [1]	$\overline{Alarm}$	$\overline{Alarm}$
Screen [2]	Screen [2]	Screen [2]	Screen [2]

[1] depending on ordering code
[2] connected to housing

CONNECTION DIAGRAM CABLE TPE

cable TPE	Output		
(E, F)	RS 422	push-pull	push-pull
Colour	(R, T)	(K)	complementary (I)
brown/green	5/10...30 VDC=	10...30 VDC=	10...30 VDC=
blue	Sense V_{CC}		Sense V_{CC}
brown	Channel A	Channel A	Channel A
green	Channel $\overline{A}$		Channel $\overline{A}$
grey	Channel B	Channel B	Channel B
pink	Channel $\overline{B}$		Channel $\overline{B}$
red	Channel N	Channel N	Channel N
black	Channel $\overline{N}$		Channel $\overline{N}$
white/green	GND	GND	GND
violet (white) [1]	$\overline{Alarm}$/Sense GND [2]	$\overline{Alarm}$	$\overline{Alarm}$
Screen [3]	Screen [3]	Screen [3]	Screen [3]

[1] white for RS 422 + Sense (T)
[2] depending on ordering code
[3] connected to housing

Industrial types

CONNECTOR 12 POLE (CONIN)

Pin	RS 422 + Sense (T)	RS 422 + Alarm (R)	push-pull (K)	push-pull complementary
1	Channel $\overline{B}$	Channel $\overline{B}$	N.C.	Channel $\overline{B}$
2	Sense V_{CC}	Sense V_{CC}	N.C.	Sense V_{CC}
3	Channel N	Channel N	Channel N	Channel N
4	Channel $\overline{N}$	Channel $\overline{N}$	N.C.	Channel $\overline{N}$
5	Channel A	Channel A	Channel A	Channel A
6	Channel $\overline{A}$	Channel $\overline{A}$	N.C.	Channel $\overline{A}$
7	N.C.	$\overline{Alarm}$	$\overline{Alarm}$	$\overline{Alarm}$
8	Channel B	Channel B	Channel B	Channel B
9	N.C. [1]	N.C. [1]	N.C. [1]	N.C. [1]
10	GND	GND	GND	GND
11	Sense GND	N.C.	N.C.	N.C.
12	5 VDC =	5/10...30 VDC=	10...30 VDC=	10...30 VDC=



Pin-assignment connector counter clockwise (ccw)



connector clockwise (cw)

[1] Screen for cable with CONIN connector

CONNECTOR 10 POLE (MIL)

Pin	RS 422/Push-pull complementary Euro-pinout (connection codes 0 and K)	Push-pull (0 and K)	RS 422/Push-pull complementary US-pinout (R and T)
1/A	Channel A	Channel A	Channel A
2/B	Channel B	Channel B	Channel B
3/C	Channel N	Channel N	Channel N
4/D	5/10...30 VDC =	10...30 VDC =	5/10...30 VDC =
5/E	$\overline{Alarm}$	$\overline{Alarm}$	$\overline{Alarm}$
6/F	GND	GND	GND
7/G	Channel $\overline{A}$	Screen	Screen
8/H	Channel $\overline{B}$	N.C.	Channel $\overline{A}$
9/I	Channel $\overline{N}$	N.C.	Channel $\overline{B}$
10/J	Screen	Screen	Channel $\overline{N}$

CONNECTOR 6/7 POLE (MIL)

	MIL 6 pole	MIL 7 pole
Pin	Push-pull	Push-pull
1/A	10...30 VDC	Channel A
2/B	Channel A	Channel B
3/C	Channel B	Channel N
4/D	Channel N	10...30 VDC =
5/E	GND	$\overline{Alarm}$
6/F	Screen	GND
7/G	-	Screen

CONNECTOR 6 POLE (BINDER)

Description (push-pull)	Pin
10 ... 30 VDC	1
Channel A	2
Channel N	3
Channel B	4
$\overline{Alarm}$	5
GND	6

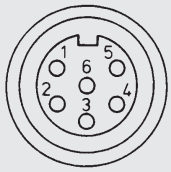

DIMENSIONED DRAWINGS

Synchro flange, 58 mm
Connecting cable axial/radial

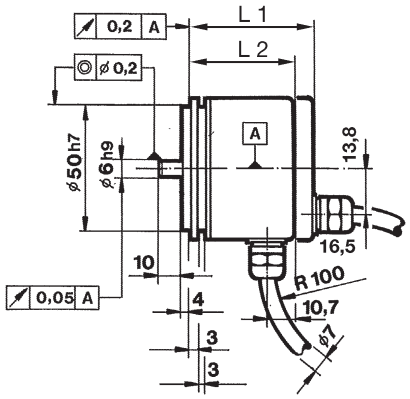

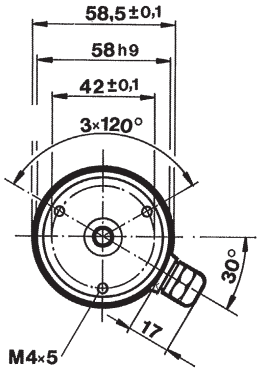

Connector 12 pole, axial/radial

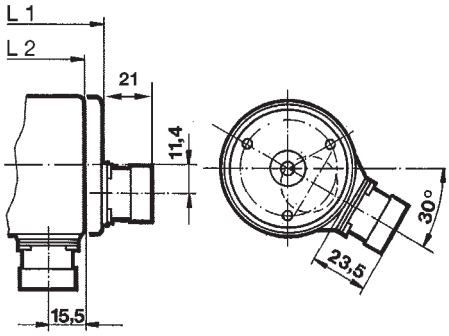

R for alternating bending > 100 mm
R for permanent bending > 40 mm

Dimensions in mm

Clamping flange, 58 mm
Connecting cable axial/radial

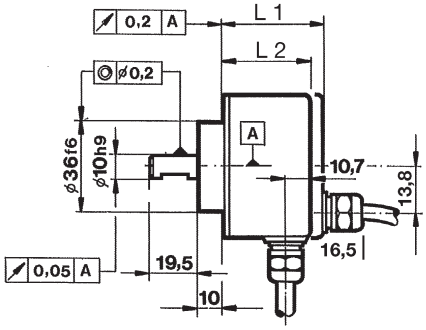

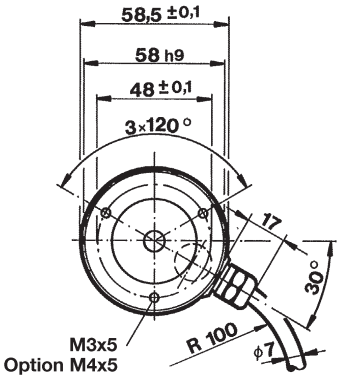

Connector 12 pole, axial, radial

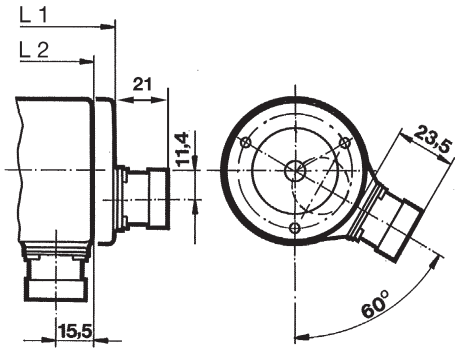

R for alternating bending > 100 mm
R for permanent bending > 40 mm

Dimensions in mm

DIMENSIONS

Type	Connection	Output [1]	axial L_1	radial L_2
Synchro flange, 58 mm	cable	R (with U_B = 5 V), T, K, I	51.5	41.5
		R (with U_B = 10...30 V)	56	56
	connector	R (with U_B = 5 V), T, K, I	57.5	51.5
		R (with U_B = 10...30 V)	57.5	56
Clamping flange, 58 mm	cable	R (with U_B = 5 V), T, K, I	45.5	35.5
		R (with U_B = 10...30 V)	50	50
	connector	R (with U_B = 5 V), T, K, I	51.5	45.5
		R (with U_B = 10...30 V)	51.5	50

[1] R = RS 422 + Alarm, T = RS 422 + Sense, K = push-pull, I = push-pull complementary

DIMENSIONED DRAWINGS

Synchro clamping flange, 63.5 mm

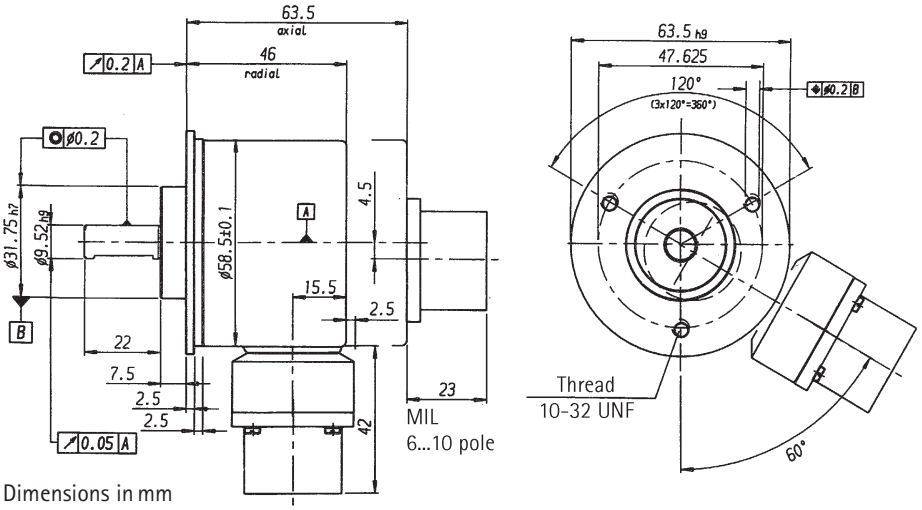

Dimensions in mm

Square flange 63.5 x 63.5 mm

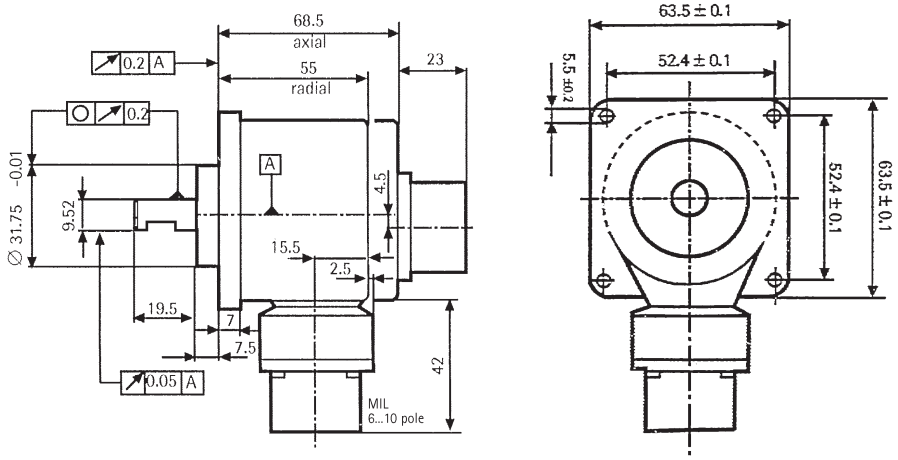

Dimensions in mm

Square flange, 80 x 80 mm

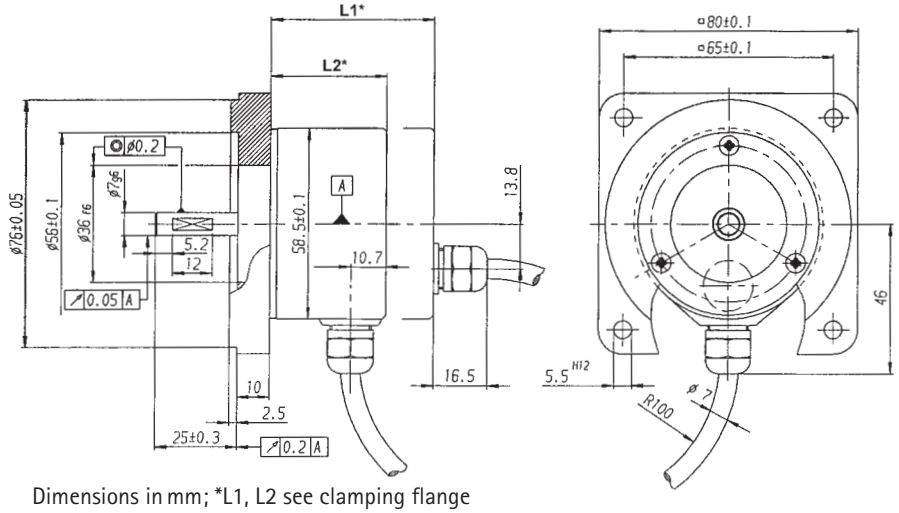

R for alternating bending > 100 mm
R for permanent bending > 40 mm

Dimensions in mm; *L1, L2 see clamping flange

Industrial types

STANDARD VERSIONS
Guide for selection of RI 58-O

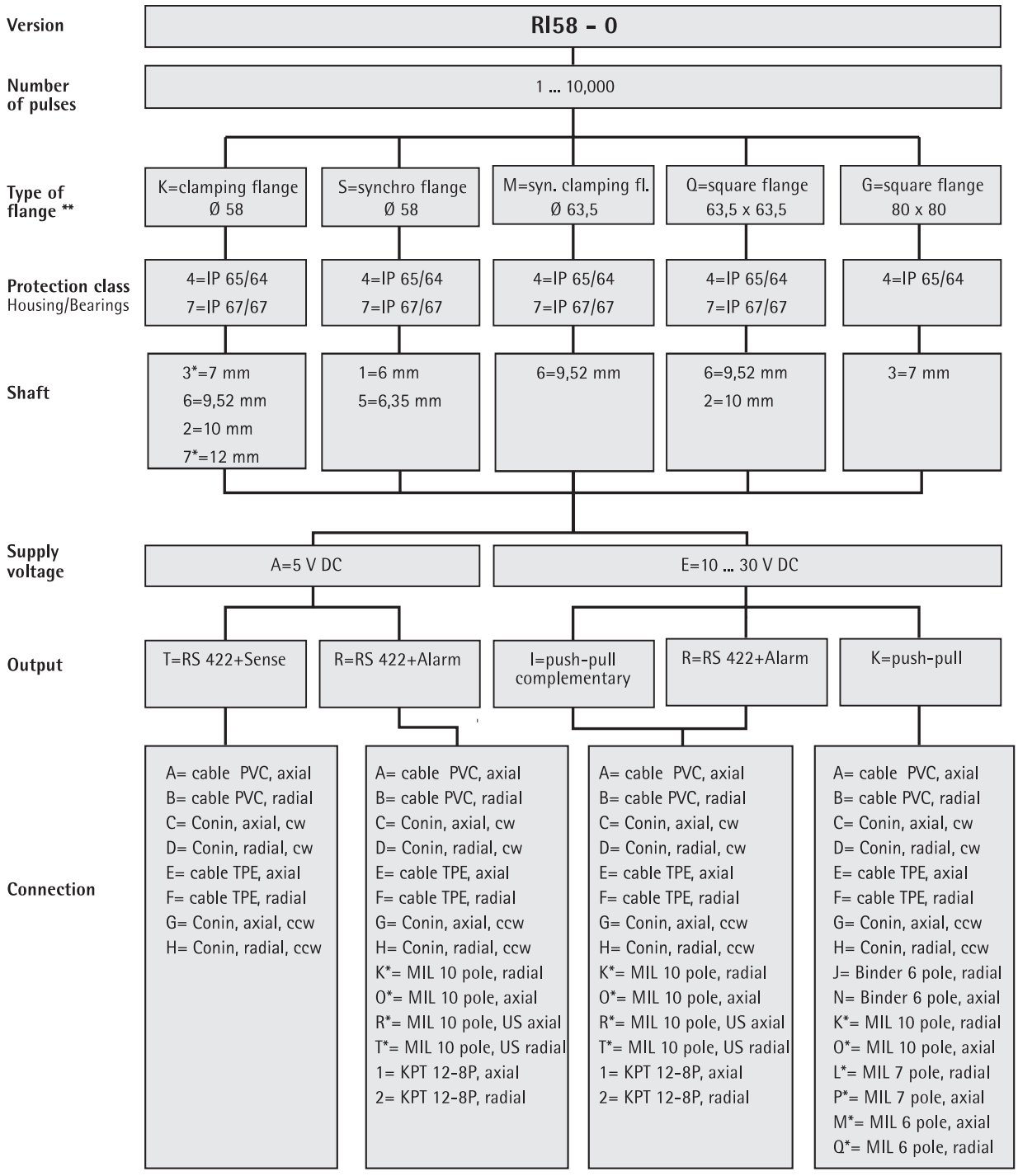

* not for IP67
** other flange versions can be realized by combination of clamping flange + flange adapter (see Accessories)
e.g. RI58 with synchro flange and 10 mm-shaft: version clamping flange with 10 mm-shaft + synchro flange adapter (1 522 328)

Industrial types

STANDARD VERSIONS
Guide for selection of RI 58-T

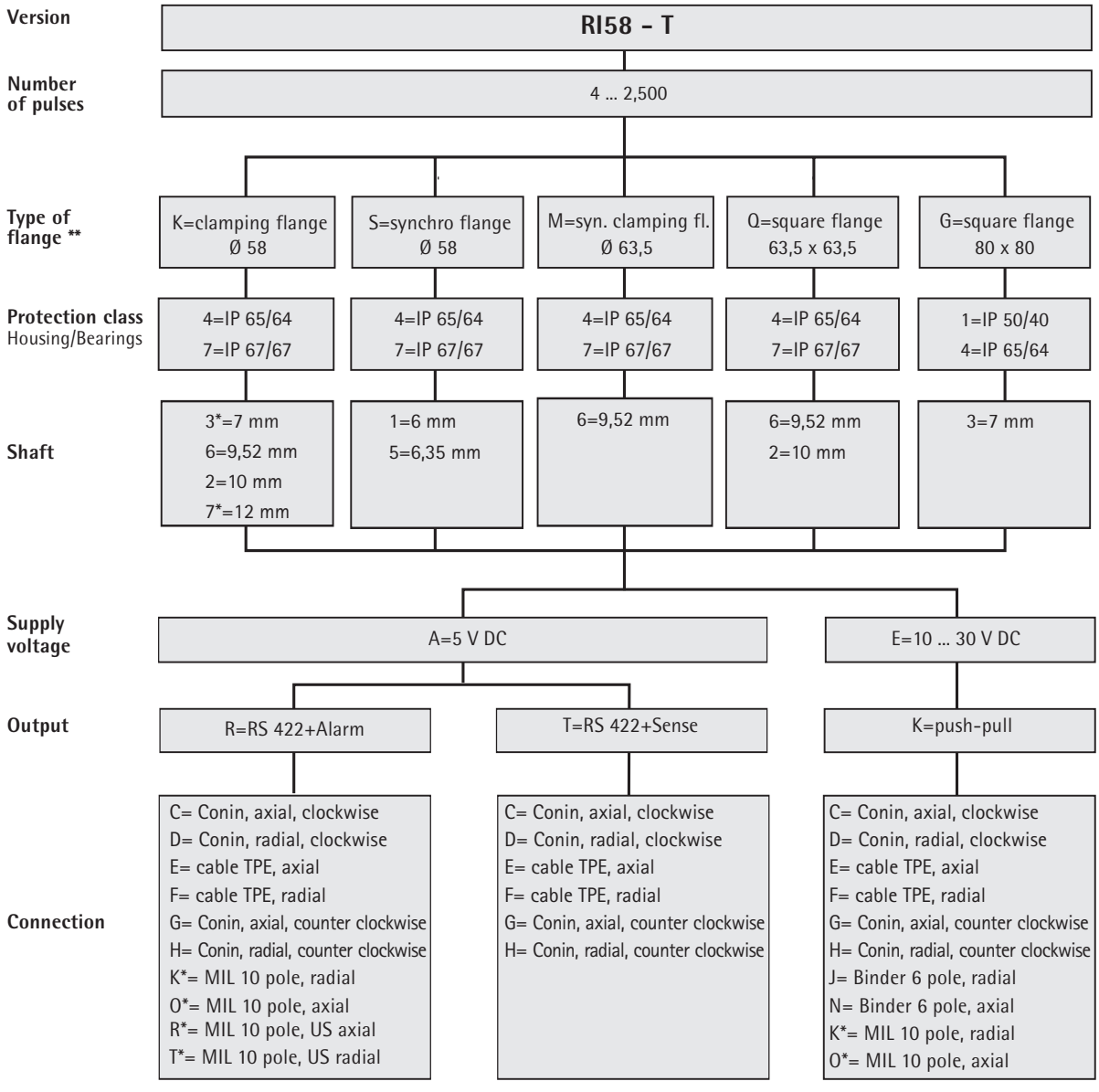

* not for IP67
** other flange versions can be realized by combination of clamping flange + flange adapter (see Accessories)
e.g. RI58 with synchro flange and 10 mm-shaft: version clamping flange with 10 mm-shaft + synchro flange adapter (1 522 328)

Further versions on request

Incremental Shaft Encoders Type RI 58

Industrial types

ORDERING DATA
Please check „selection guide" on previous pages as not all combinations are possible!

O standard
T high temperature

Supply voltage
A 5 VDC
E 10 ... 30 VDC

Type of flange
S synchro flange
K clamping flange
G square flange 80 x 80
Q square flange 63.5 x 63.5
M synchro clamping flange

Shaft diameter
1 6 mm
2 10 mm
3 7 mm
5 6.35 mm
6 9.52 mm
7 12 mm

R I 5 8 – □ / □ □ □ · □ □ □ □

Number of pulses
RI58-O: **1 ... 10,000**
RI58-T: **4 ... 2,500**

Protection class
4 IP 64
7 IP 67

Output
T RS 422 + Sense
K push-pull, short circuit proof
I push-pull complementary
R RS 422+Alarm

Type of connection
A PVC-cable axial [2]
B PVC-cable radial
C CONIN [1], axial clockwise
D CONIN [1], radial clockwise
E TPE-cable axial
F TPE-cable radial
G CONIN [1], axial counter clockwise
H CONIN [1], radial counter clockwise
J BINDER [1] 6 pole, radial
N BINDER [1] 6 pole, axial
O MIL MS [1], 10 pole, axial
K MIL MS [1], 10 pole, radial
L MIL [1] 7 pole, radial
P MIL 7 pole, axial
M MIL 6 pole, axial
Q MIL 6 pole, radial
R MIL 10 pole, U.S. axial [3]
T MIL 10 pole, U.S. radial [3]
1 KPT 12-8 P, axial
2 KPT 12-8 P, radial

[1] encoder connector with pins
[2] European pinout
[3] U.S. pinout

ACCESSORIES

Clamping eccentric
(set of three)
Ordering code 0 070 655

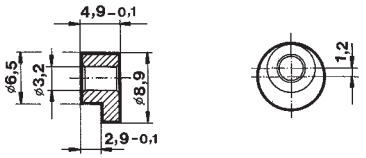

Spring washer coupling
hole 6/6 mm
Ordering code 3 520 081

hole 10/10 mm
Ordering code 3 520 088

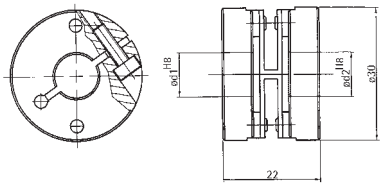

Cable plug connector
for connector (CONIN), clockwise
(type of connection C, D)
Ordering code 3 539 202

for connector (CONIN), counter clockwise (type of connection G, H)
Ordering code 3 539 229

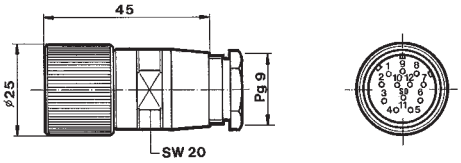

Mounting spanner
for CONIN connectors
Ordering code 3 539 343

Extension cables
(TPE)

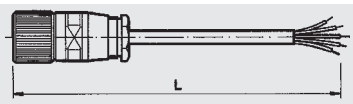

12-pin plug (socket) on one end	clockwise (C, D) **Ordering code**	counter clockwise (G, H) **Ordering code**
L = 3 m	**1 522 348**	**1 522 394**
L = 5 m	**1 522 349**	**1 522 395**
L = 10 m	**1 522 350**	**1 522 396**
TPE-cable (not made up with connectors)	**3 280 112 +** state required length	

For more detailed specifications and other accessories see "Accessories"