OA0108

Diffuse reflection sensor

OAT-FKOA

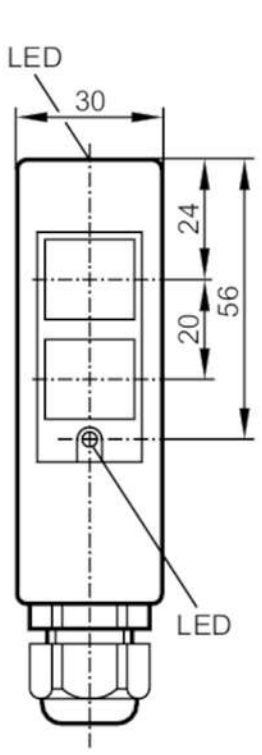

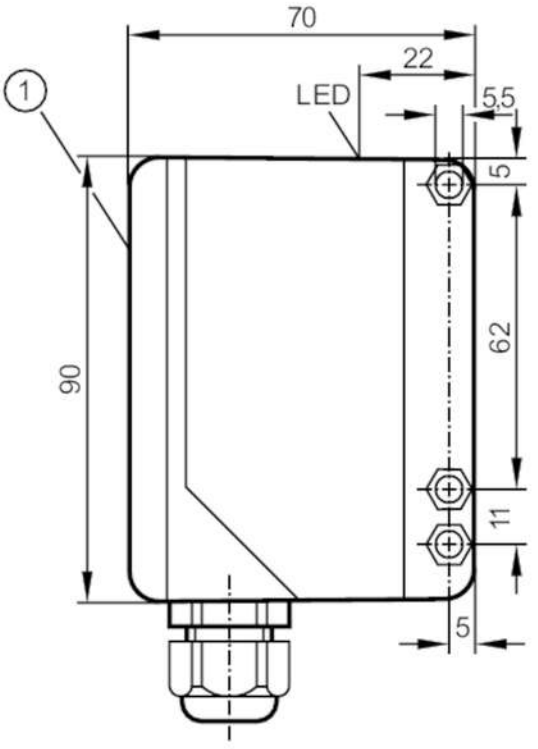

1 selection switch and potentiometer under cover
receiver in upper lens
transmitter in lower lens

Product characteristics		
Type of light		infrared light
Housing		rectangular
Application		
Function principle		Diffuse reflection sensor
Electrical data		
Frequency AC	[Hz]	47...63
Operating voltage	[V]	20...250 AC/DC
Max. power consumption	[VA]	2
Protection class		II
Reverse polarity protection		no
Type of light		infrared light
Wave length	[nm]	880
Outputs		
Electrical design		relay
Output function		light-on/dark-on mode; (programmable)
Contact rating		250 V AC / 3 A / 360 VA, 125 V DC / 3 A / 30 W
Switching frequency AC	[Hz]	10
Switching frequency DC	[Hz]	10

OA0108

Diffuse reflection sensor

OAT-FKOA

Short-circuit proof			no
Overload protection			no
Detection zone			
Range	[mm]		5...1500; (white paper 200 x 200 mm)
Range adjustable			yes
Max. light spot diameter	[mm]		370
Light spot dimensions refer to			at maximum range
Operating conditions			
Ambient temperature	[°C]		-25...60
Protection			IP 65
Tests / approvals			
EMC		EN 60947-5-2	
MTTF	[years]		288
Mechanical data			
Weight	[g]		304.5
Housing			rectangular
Dimensions	[mm]		90 x 30 x 70
Materials			PPO modified
Lens material			PMMA
Lens alignment			side lens
Displays / operating elements			
Display		switching status	1 x LED, yellow
		operation	1 x LED, green
		function	1 x LED, red
Electrical connection			
Required protection			miniature fuse to IEC60127-2 sheet 1; ≤ 5 A; fast acting
Accessories			
Items supplied			Angle bracket: 1, E20514
			screwdrivers
Remarks			
Remarks			Recommendation: Check the safe functioning of the unit after a short circuit.
Pack quantity			1 pcs.

OA0108

Diffuse reflection sensor

OAT-FKOA

Electrical connection

terminals: ...1.5 mm²; Cable sheath: Ø 4.5...10 mm; Cable gland: M16 X 1.5

Connection

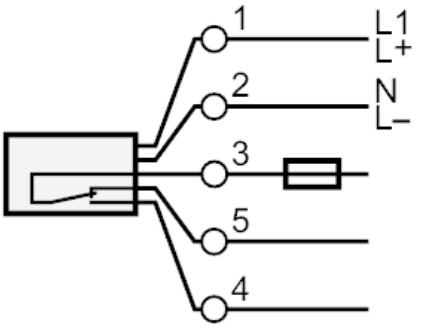

Note : miniature fuse to IEC60127-2 sheet 1 ≤ 5 A fast acting

Diagrams and graphs

excess gain graph

