E80371

RFID tag

ID-TAG/30X2.5/06 - 896 bit

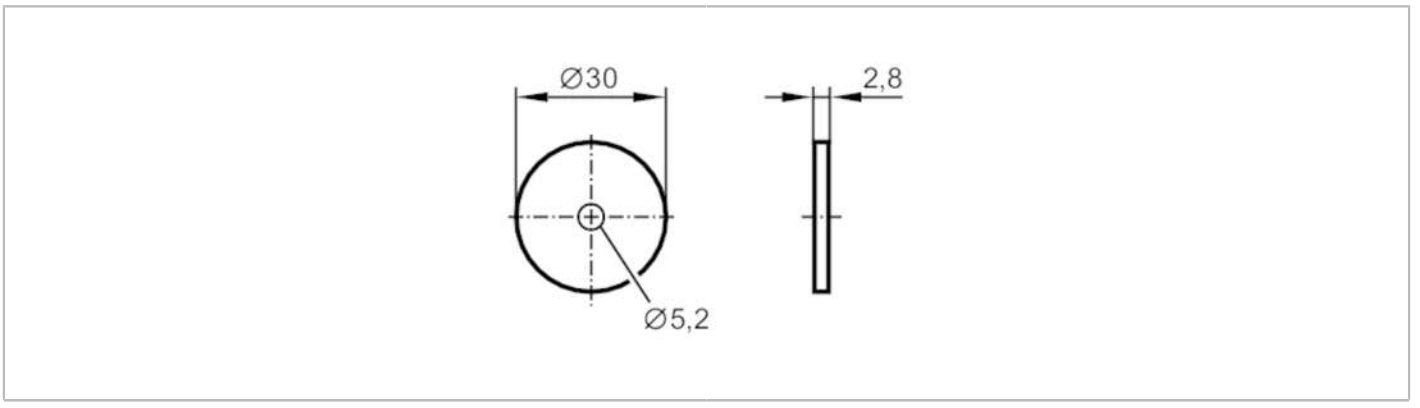

Application		
Operating temperature (active)	[°C]	-40...85
Peak temperature (passive)	[°C]	90
Electrical data		
Operating frequency	[MHz]	13,56
Memory size	[bit]	896
Memory type		EEPROM
Chip type		ICODE SLIX
Number of blocks		28
Block size	[Byte]	4
Unique Identification Number (UID)	[Byte]	8
RFID standard		ISO 15693
Max. read cycles		unlimited
Max. write cycles		100000
Operating conditions		
Ambient temperature	[°C]	-40...85
Storage temperature	[°C]	-40...90
Protection		IP 68; IP 69K
Tests / approvals		
Shock resistance		DIN IEC 68-2-27 / 40 g 18 ms
Vibration resistance		DIN IEC 68-2-6 / 10 g 10...2000 Hz
Radio approval		ISO 15693
Mechanical data		
Weight	[g]	4.75
Type of mounting		installation on non-metal materials; (screw fastening ; sticking to a surface)
Dimensions	[mm]	Ø 30 / L = 3
Materials		PA 6 black
Remarks		
Pack quantity		1 pcs.

E80371

RFID tag

ID-TAG/30X2.5/06 - 896 bit

Other data

Reading distance when mounted on non-metal (mm)

ANT410 / DTI410	15
ANT411 / DTI411	20
ANT420 / DTI420 / DTM424 / DTI424 / DTM426	15
ANT421 / DTI421 / DTM425 / DTI425 / DTM427	40
ANT430 / DTI430 / DTM434 / DTI434 / DTM436	30
ANT431 / DTI431 / DTM435 / DTI435 / DTM437	50
ANT513 / DTI513 / DTC510	65
ANT515 / DTI515 / ANT516 / DTI516	35
ANT600 / DTI600	140