PV7004

Pressure switch with IO-Link

PV-010-REG14-UFRVG/US/ /

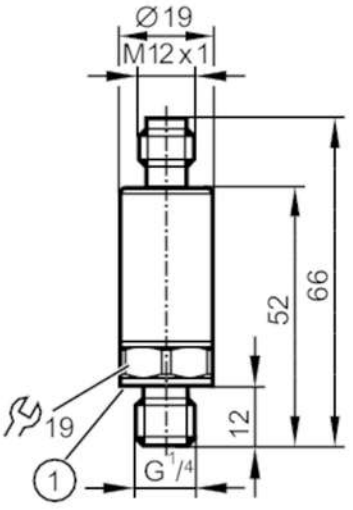

1 Sealing

Product characteristics				
Number of inputs and outputs	Number of digital outputs: 2			
Measuring range	-1...10 bar	-14.5...145 psi	-100...1000 kPa	-0.1...1 MPa
Process connection	threaded connection G 1/4 external thread (DIN EN ISO 1179-2); internal thread:M5			
Application				
Measuring element	metallic thin film cell			
Application	for industrial applications			
Media	liquids and gases			
Medium temperature [°C]	-40...90			
Min. bursting pressure	300 bar	4350 psi	30 MPa	
Pressure rating	25 bar	360 psi	2.5 MPa	
Note on pressure rating	static			
Vacuum resistance	-1000 mbar	-0.1 MPa		
Type of pressure	relative pressure; vacuum			
Electrical data				
Operating voltage [V]	18...30 DC			
Current consumption [mA]	< 15			
Min. insulation resistance [MΩ]	100; (500 V DC)			
Protection class	III			
Reverse polarity protection	yes			
Power-on delay time [s]	< 0.3			
Inputs / outputs				
Number of inputs and outputs	Number of digital outputs: 2			
Outputs				
Total number of outputs	2			
Output signal	switching signal; IO-Link; (configurable)			
Electrical design	PNP/NPN			
Number of digital outputs	2			

PV7004

Pressure switch with IO-Link

PV-010-REG14-UFRVG/US/ /

Output function		normally open / normally closed; (parameterisable)		
Max. voltage drop switching output DC	[V]	2		
Permanent current rating of switching output DC	[mA]	100		
Switching frequency DC	[Hz]	< 170		
Short-circuit protection		yes		
Type of short-circuit protection		pulsed		
Overload protection		yes		
Measuring/setting range				
Measuring range		-1...10 bar	-14.5...145 psi	-100...1000 kPa	-0.1...1 MPa
Set point SP		-0.9...10 bar	-13.1...145 psi	-0.09...1 MPa
Reset point rP		-0.95...9.95 bar	-13.8...144.3 psi	-0.095...0.995 MPa
In steps of		0.005 bar	0.1 psi	0.0005 MPa
Factory setting		SP1 = 2.5 bar	rP1 = 2.3 bar	ou1 = Hno;
		SP2 = 7.5 bar	rP2 = 7.3 bar	ou2 = Hno;
		dS1/dS2 = 0 ms	dr1/dr2 = 0 ms	
		coF = 0 %	P-n = PnP	dAP= 60 ms
Accuracy / deviations				
Switch point accuracy	[% of the span]	< ± 0,5 (nach DIN EN 61298-2)		
Repeatability	[% of the span]	< ± 0,05; (with temperature fluctuations < 10 K)		
Characteristics deviation	[% of the span]	< ± 0,5; (linearity incl. hysteresis and repeatability, limit value setting to DIN EN IEC 62828-1)		
Linearity deviation	[% of the span]	< ± 0,1 (BFSL) / < ± 0,2 (LS)		
Hysteresis deviation	[% of the span]	< ± 0,2		
Long-term stability	[% of the span]	< ± 0,1; (per 6 months)		
Temperature coefficient zero point	[% of the span / 10 K]	< 0,1 (-25...90 °C) / < 0,2 (-40...-25 °C)		
Temperature coefficient span	[% of the span / 10 K]	< 0,1 (-25...90 °C) / < 0,2 (-40...-25 °C)		
Response times				
Response time	[ms]	< 3		
Software / programming				
Parameter setting options		hysteresis / window; normally open / normally closed; switching logic; switch-on/switch-off delay; Damping		
Interfaces				
Communication interface		IO-Link		
Transmission type		COM2 (38,4 kBaud)		
IO-Link revision		1.1		
SDCI standard		IEC 61131-9		
Profiles		Smart Sensor: Process Data Variable; Device Identification, Device Diagnosis		

PV7004

Pressure switch with IO-Link

PV-010-REG14-UFRVG/US/ /

SIO mode		yes	
Required master port type		A	
Process data analogue		2	
Process data binary		2	
Min. process cycle time	[ms]	5	
Supported DeviceIDs		**Type of operation**	**DeviceID**
		default	713

Operating conditions			
Ambient temperature	[°C]	-40...90	
Storage temperature	[°C]	-40...100	
Protection		IP 67; IP 69K	

Tests / approvals			
EMC		DIN EN 61326-1	
Shock resistance		DIN EN 60068-2-27	500 g (1 ms)
Vibration resistance		DIN EN 60068-2-6	20 g (10...2000 Hz)
MTTF	[years]	667.77	
UL approval		UL Approval no.	J015
Pressure Equipment Directive		Sound engineering practice; can be used for group 2 fluids; group 1 fluids on request	

Mechanical data		
Weight	[g]	63.5
Housing		cylindrical
Dimensions	[mm]	Ø 19 / L = 66
Materials		stainless steel (630/1.4542/17-4 PH); stainless steel (316L/1.4404); PEI
Materials (wetted parts)		stainless steel (303/1.4305); stainless steel (630/1.4542/17-4 PH)
Min. pressure cycles		60 million; (at 1.2 times nominal pressure)
Tightening torque	[Nm]	25...35; (recommended tightening torque; depends on lubrication, seal and pressure rating)
Process connection		threaded connection G 1/4 external thread (DIN EN ISO 1179-2); internal thread:M5
Process connection sealing		FKM (DIN EN ISO 1179-2)
Restrictor element integrated		yes

Remarks	
Remarks	BFSL = Best Fit Straight Line
	LS = limit value setting
Pack quantity	1 pcs.

Electrical connection

Connector: 1 x M12; coding: A

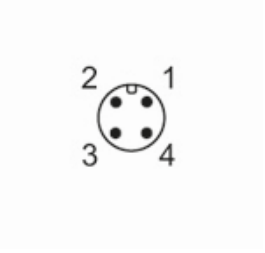

PV7004

Pressure switch with IO-Link

PV-010-REG14-UFRVG/US/ /

Connection

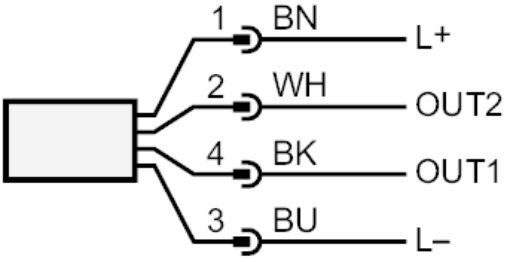

OUT1	switching output IO-Link
OUT2	switching output
	colours to DIN EN 60947-5-2
	Core colours :
BK =	black
BN =	brown
BU =	blue
WH =	white