E113501 | EXPERT 6 x 6 box wrenches



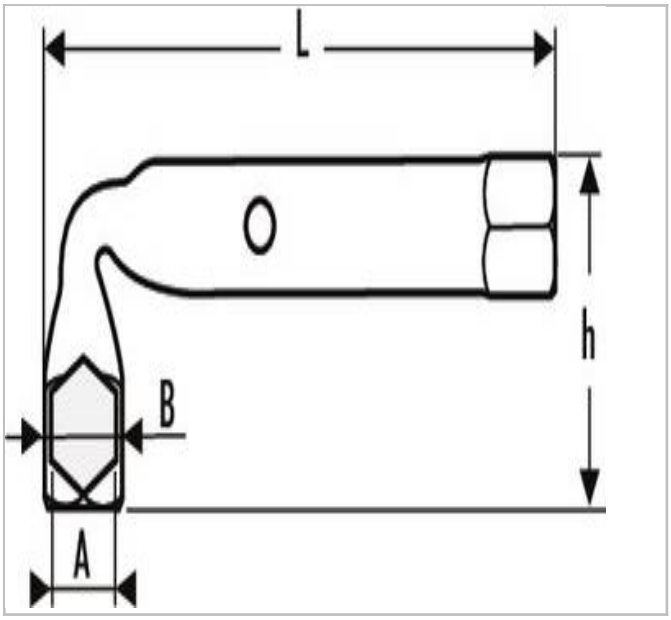

Description:

- ISO 691
- ISO 2236
- Will reach nuts on long threaded rods.
- Through hole for using a bar.
- High chrome finish.

© FACOM 2020

Informations:

	E113501
A [mm]	5.5
A [mm]	5,5
A [in]	
Length L [mm]	95.0
Head Width B [mm]	9.0
Height H [mm]	25
Weight [Kg]	0.025

© FACOM 2020