trumeter
innovation by design

HED251 | HED261

Electronic Switch Closure Totalizer



The HED 251-T/261-T are miniature electronic counters (24mm x 48mm) designed for either direct PCB mounting or panel mounting and is ideally suited to battery powered applications. With 4 digit (HED 251) and 8 digit with upto 10kHz high speed input (HED 261) options, these totalizers feature the latest CMOS circuitry to achieve very low quiescent current consumption and are backlit for visibility. The HED counters are ideal for contact closure and reed switch signal inputs and are suitable for a range of OEM applications.

Key Features

- Uses the latest CMOS circuitry to achieve very low quiescent current consumption
- 10mm/8mm black character high contrast LCD display
- Integral backlight
- Counts pulses up to 18Hz frequency (HED251) or 20Hz/10kHz (HE261)
- External reset input
- CE and RoHS compliant

trumeter
innovation by design

Specifications

	HED 251	HED 261
Display	4 digit, black LCD, 10mm characters Leading zeros blanking	8 digit, black LCD, 8mm characters Leading zeros blanking
Count Range	0-9999	0-99999999
Count Input	Contact closure open collector input. 18Hz max, negative edge triggered, 0.7V threshold 1.8V max, 25mS min pulse width	• High speed input (pin3) 10kHz max negative edge triggered, 0.7V threshold 18V max, 50uS min pulse width • Contact closure open collector input (pin2). 20Hz max, negative edge triggered, 0.7V threshold 18V max, 15mS min pulse width
Supply voltage	3.0 VDC	2.7 – 3.3V DC
Count Speed	Up to 18 Hz	Up to 20Hz and 10kHz
Current consumption	Counter - <10µA, typically 5µA, backlight - 40mA max	
Operating Temperature	-10°C to +50°C	
Storage Temperature	-20°C to +70°C	
Certifications	CE, RoHS	
Reset Option	Non-Reset	

Dimensions

HED 251

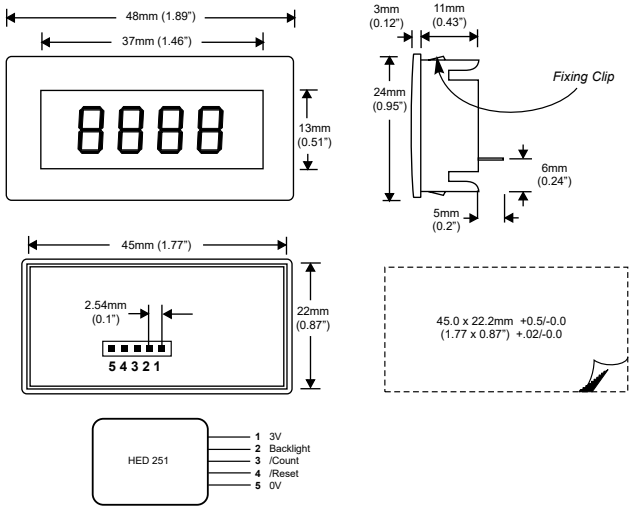

HED 261

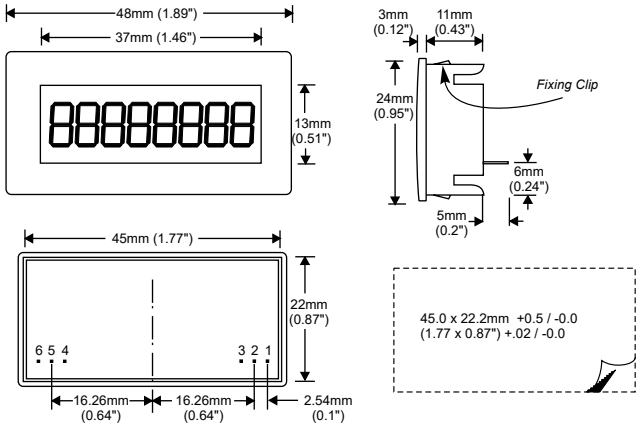

Part Numbers

HED251-T	4 Digit Panel Mount Counter
HED261-T	8 Digit Panel Mount Counter



www.trumeter.com

Trumeter (Europe)
Pilot Mill
Alfred Street
Bury,
BL9 9EF
Tel: +44 161 674 0960
Email: sales.uk@trumeter.com

Trumeter (The Americas)
6601 Lyons Rd, Suite H-7,
Coconut Creek, Florida
FL 33073,
USA
Tel: +1 954 725 6699
Email: sales.usa@trumeter.com

Innovative Design Technologies Sdn. Bhd
Lot 5881, Lorong Iks Bukit Minyak 1
Taman Perindustrian Iks, 14000 Bukit Tengah
Penang, Malaysia
Web: www.idtworld.com
Tel: + 604 5015700
Email: sales.my@idtworld.com