695 LED Signal Tower Clean*SIGN* - red/yellow/green Base mounting



Fixed, three tier colour distribution in red, yellow and green

- LED Signal Tower for use in cleanroom applications (Fraunhofer IPA approval) and the food industry (EHEDG* approval)
- NEW Now for ceiling mounting in cleanrooms or base mounting on machines and production equipment with flat surfaces
- LED Permanent lights in red, yellow and green (SMD technology)
- Integrated, high-output buzzer (85 dB)

TECHNICAL SPECIFICATIONS:

Life duration up to 50,000 hrs

Dimensions (L x H x W):	112 mm x 391 mm x 125 mm
Housing::	PA, black
Lens:	PA, transparent
Fixing:	Base mounting, Ceiling mounting
Connection:	Cable, 2 m long, included in the assembly
Current consumption:	Optical: up to 120 mA per tier Buzzer: 20 mA

In preparation

ORDER SPECIFICATIONS:

Play Sound www.werma.com

Clean*SIGN* with Buzzer red/yellow/green	24 V = **695 310 55**

Available: 1st Quarter 2013

The technical specifications and order specifications of the LED Signal Tower Clean*SIGN* with integrated bracket can be found at www.werma.com or in our main catalogue (see page 77).



In its inactive state, the signal tower blends into the background thanks to its translucent housing

ADDITIONAL INFORMATION:

The LED Signal Tower Clean*SIGN* has been specifically developed and constructed for use in the food and pharmaceutical industry as well as in cleanroom applications. Clean*SIGN* fulfills the ideal requirements to guarantee risk-free use in these sensitive applications:

EHEDG* approval for the food industry: this approval confirms that strict design criteria have been met to avoid constructional weaknesses and to minimise the risk of contamination.

Fraunhofer IPA approval for cleanrooms: enables the Clean*SIGN* to be used in **one the most demanding Air Cleanliness Classes (Class 2) in accordance with DIN EN ISO 14644-1** and therefore covers even the most sensitive cleanroom applications. This approval also confirms the chemical resistance of the signal tower housing against common cleaning agents.

TECHNICAL DIAGRAM:

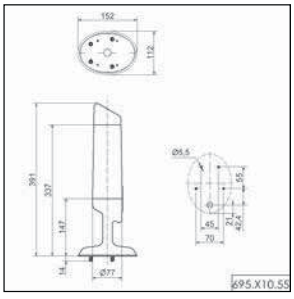

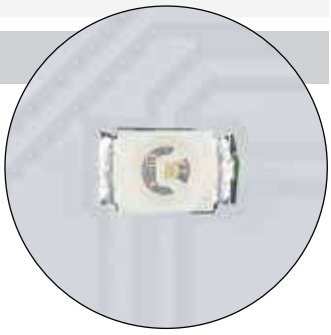

Fixed colour distribution with SMD technology

695 LED Signal Tower Clean*SIGN* - RGY Base mounting



The colours red, yellow and green can set via DIP switch for any equired order or distribution

NEW

- LED Signal Tower for use in cleanroom
- applications (Fraunhofer IPA approval) and the food industry (EHEDG approval)
- Now for base or ceiling mounting
- Permanent light in red, yellow and green (RGY LEDs)
- Colour distribution can be set and
- adjusted via switch as required
- Complete illumination in one colour possible (can be triggered externally)
- Integrated, high-output buzzer (85 dB)

TECHNICAL SPECIFICATIONS:

Life duration up to 50,000 hrs

Dimensions (L x H x W):	112 mm x 391 mm x 125 mm
Housing:	PA, black
Lens:	PA, transparent
Fixing:	Base mounting, Ceiling mounting
Connection:	Screw terminal max. 1.5 mm²
Current consumption:	Optical: depending on the colour combination, 240 mA max.
	Buzzer: 20 mA

In preparation



ORDER SPECIFICATIONS:

Play Sound www.werma.com

Clean*SIGN* with Buzzer	24 V =
RGY-LED	**695 210 55**

Available: 1st Quarter 2013

The technical specifications and order specifications of the LED Signal Tower Clean*SIGN* with integrated bracket can be found at www.werma.com or in our main catalogue (see page 78).

ADDITIONAL INFORMATION:

Wide range of sophisticated design features

The new Clean*SIGN* from WERMA is equipped with a series of sophisticated technical, constructional and design features which make a significant contribution to the safety of your products.

For example, the Clean*SIGN* has no grooves or joints where dirt could collect, facilitating quick and easy cleaning.



Attention-grabbing illumination in one colour (can be triggered externally)

TECHNICAL DIAGRAM:

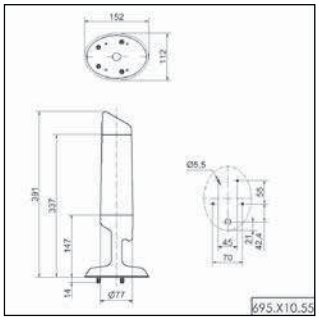

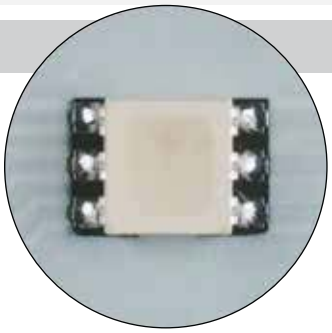

Completely flexible colour distribution thanks to RGY LEDs

695 LED Signal Tower Clean*SIGN* - RGB Base mounting



Complete illumination in one colour

NEW

- LED Signal Tower for use in cleanroom applications (Fraunhofer IPA approval) and the food industry (EHEDG approval)
- Now for base or ceiling mounting
- Permanent light and additional light effects
- 7 colours selectable (RGB LEDs)
- Colour distribution can be set and adjusted via switch as required
- Complete illumination in one colour possible (can be triggered externally)
- Integrated, high-output buzzer (85 dB)

TECHNICAL SPECIFICATIONS:

Life duration up to 50,000 hrs

Dimensions (L x H x W):	112 mm x 391 mm x 125 mm
Housing:	PA, black
Lens:	PA, transparent
Fixing:	Base mounting, Ceiling mounting
Connection:	Screw terminal max. 1.5 mm²
Current consumption:	Optical: depending on the colour combination, 250 mA max. Buzzer: 20 mA
Possible colours:	Red, yellow, green, clear, blue, violet, turquoise
Light effects:	Light effects: Tier-by-tier illumination: Blinking light Complete illumination: EVS*

In preparation

ORDER SPECIFICATIONS:

Play Sound www.werma.com

Clean*SIGN* with Buzzer RGB-LED	24 V = **695 010 55**

Available: 1st Quarter 2013

The technical specifications and order specifications of the LED Signal Tower Clean*SIGN* with integrated bracket can be found at www.werma.com or in our main catalogue (see page 79).



The "EVS"* light effect ensures a maximum attention-grabbing effect (can be set with complete illumination)

ADDITIONAL INFORMATION:

Additional light effects and 7 colours
The use of RGB LEDs guarantees complete flexibility: In addition to the permanent light, additional light effects (EVS* LED or blinking light) can also be set.
Furthermore, the entire tower or the 3 individual tiers can be illuminated in seven different colours (red, yellow, green, blue, clear, violet, turquoise).

With complete illumination any one of the seven colours can be triggered externally.

* **EVS** = Enhanced Visibility System or Enhanced Visibility System.
Futher informations can be found in our main catalogue.

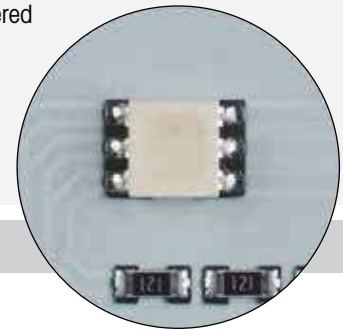

7 different colour settings from RGB LEDs

TECHNICAL DIAGRAM:

see page 16