E11645

Connecting cable with socket

ADOAO140MSS0002B11

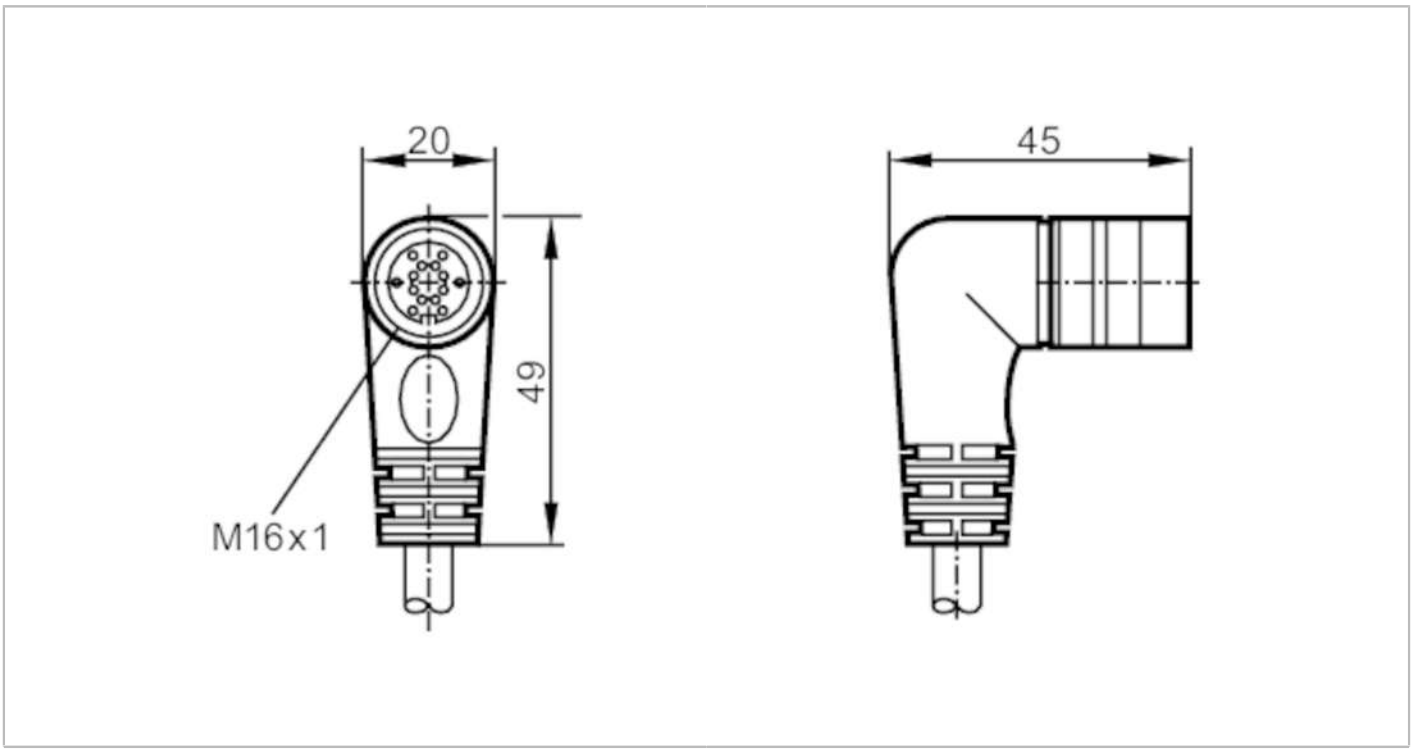

CE

Electrical data		
Operating voltage	[V]	< 30 DC
Max. current load total	[A]	3
Operating conditions		
Ambient temperature	[°C]	-25...90
Protection		IP 67
Mechanical data		
Weight	[g]	197.2
Dimensions	[mm]	45 x 20 x 49
Materials		PUR
Moulded-body material		PUR
Material nut		brass, nickel-plated
Remarks		
Pack quantity		1 pcs.

E11645

Connecting cable with socket

ADOAO140MSS0002B11

Electrical connection

Cable: 2 m, PUR, black, Ø 7.5 mm; 2 x 0.34 mm² (14 x Ø 0.15 mm) + 10 x 0.25 mm² (7 x Ø 0.2 mm)

Electrical connection - socket

Connector: 1 x M16, angled; Moulded body: PUR; Locking: brass, nickel-plated

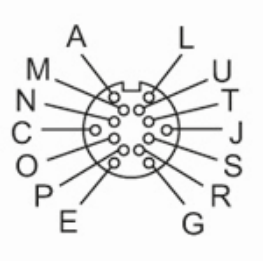

Connection

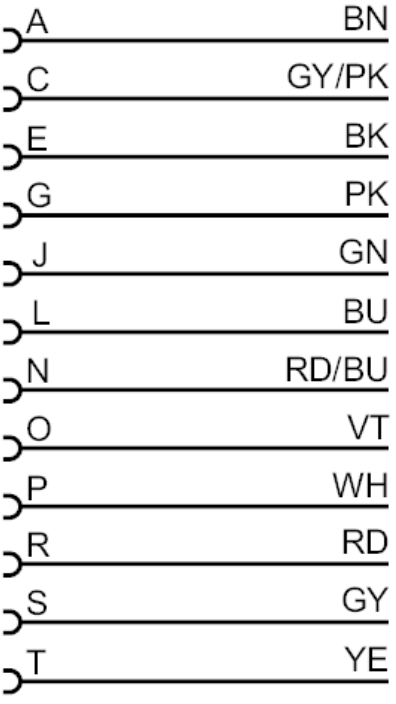

M:	not used
U:	not used
	Core colours :
BK =	black
BN =	brown
BU =	blue
GN =	green
GY =	grey
PK =	pink
VT =	lilac
WH =	white
YE =	yellow
RD =	red