efector200

O6P303

O6P-FPKG/AS/4P

Photoelectric sensors

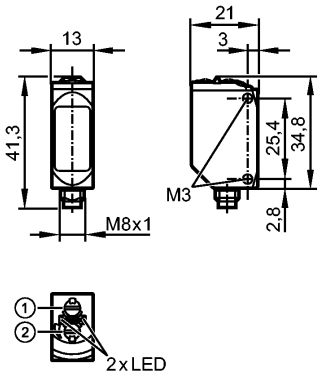

1: output function switch
2: potentiometer sensitivity

Made in Germany

Product characteristics

Retro-reflective sensor

Rectangular Metal

Connector

Polarisation filter

adjustable

Sensing range 0.05...5m (Prismatic reflector Ø 80 (E20005))

Electrical data

Electrical design		DC PNP
Operating voltage	[V]	10...30 DC
Current consumption	[mA]	12 (24 V)
Type of light		Red light 633 nm
Protection class		III
Reverse polarity protection		yes

Outputs

Output function		light-on/dark-on mode selectable
Voltage drop	[V]	< 2.5
Current rating	[mA]	100
Short-circuit protection		pulsed
Switching frequency	[Hz]	1000

Range

Sensing range	[m]	0.05...5 (Prismatic reflector Ø 80 (E20005))
Light spot diameter	[mm]	150 (at maximum range)

Excess gain graphs
x: distance in [mm]
y: excess gain factor

O6P303

O6P-FPKG/AS/4P

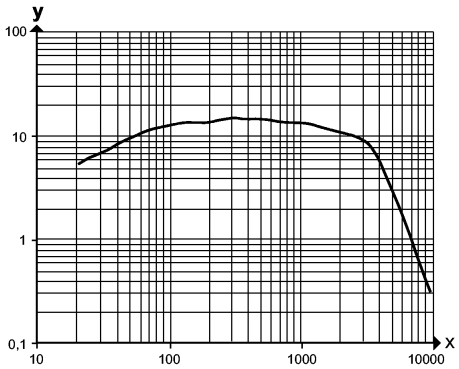

Environment		
Ambient temperature	[°C]	-25...80
Protection		IP 65 / IP 67 ; IP 68 / IP 69K
Tests / approvals		
EMC		EN 60947-5-2
MTTF	[Years]	908
UL approval number		E001
Mechanical data		
Housing materials		housing: stainless steel 316L / 1.4404; plastics: PPSU
Lens material		PMMA
Weight	[kg]	0.037
Displays / operating elements		
Output status indication	LED	yellow
Operation	LED	green
Electrical connection		
Connection		M8 connector

Wiring



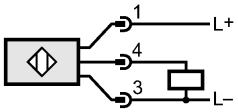

Remarks		
Remarks		cULus - Class 2 source required
Pack quantity	[piece]	1