3/2-shut-off valve, mechanically operated, Series NL2-BAV

- Qn = 3000 l/min
- Qn 1▸2 = 2800 l/min
- Qn 2▸3 = 70 l/min
- Compressed air connection output G 1/4 G 3/8
- suitable for ATEX



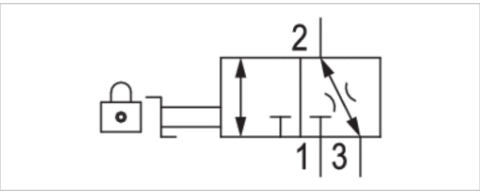

Type	Ball valve
Activation	Mechanical
Lock type	lockable
Actuating element	rotary switch
Sealing principle	metal/metal sealing
Certificates	suitable for ATEX
Nominal flow Qn	3000 l/min
Working pressure min./max.	0 ... 16 bar
Ambient temperature min./max.	-10 ... 60 °C
Medium temperature min./max.	-10 ... 60 °C
Medium	Compressed air Neutral gases
Weight	0,36 kg

Technical data

Part No.	Version	Compressed air connection type	Compressed air connection Input	Compressed air connection Output
0821300901	3/2	Internal thread	G 1/4	G 1/4
0821300903	3/2	Internal thread	G 3/8	G 3/8

Part No.	Compressed air connection Exhaust	Flow	Flow	Lock type
		Qn 1 ▸ 2	Qn 2▸3	
0821300901	G 1/4	2800 l/min	70 l/min	for padlocks
0821300903	G 1/4	2800 l/min	70 l/min	for padlocks

Nominal flow Qn with secondary pressure p2 = 6 bar at Δp = 1 bar

Suitable for use in Ex zones 1, 2, 21, 22.

Technical information

The pressure dew point must be at least 15 °C under ambient and medium temperature and may not exceed 3 °C .
Suitable for use in Ex zones 1, 2, 21, 22.
A change in the flow direction (from air supply on the left to air supply on the right) occurs by rotating installation by 180° about the vertical axis. Please see the operating instructions for further details.

Technical information

Material	
Housing	Die cast zinc
Front plate	Acrylonitrile butadiene styrene
Seals	Acrylonitrile butadiene rubber
Actuating element	Polyoxymethylene

Dimensions

Dimensions

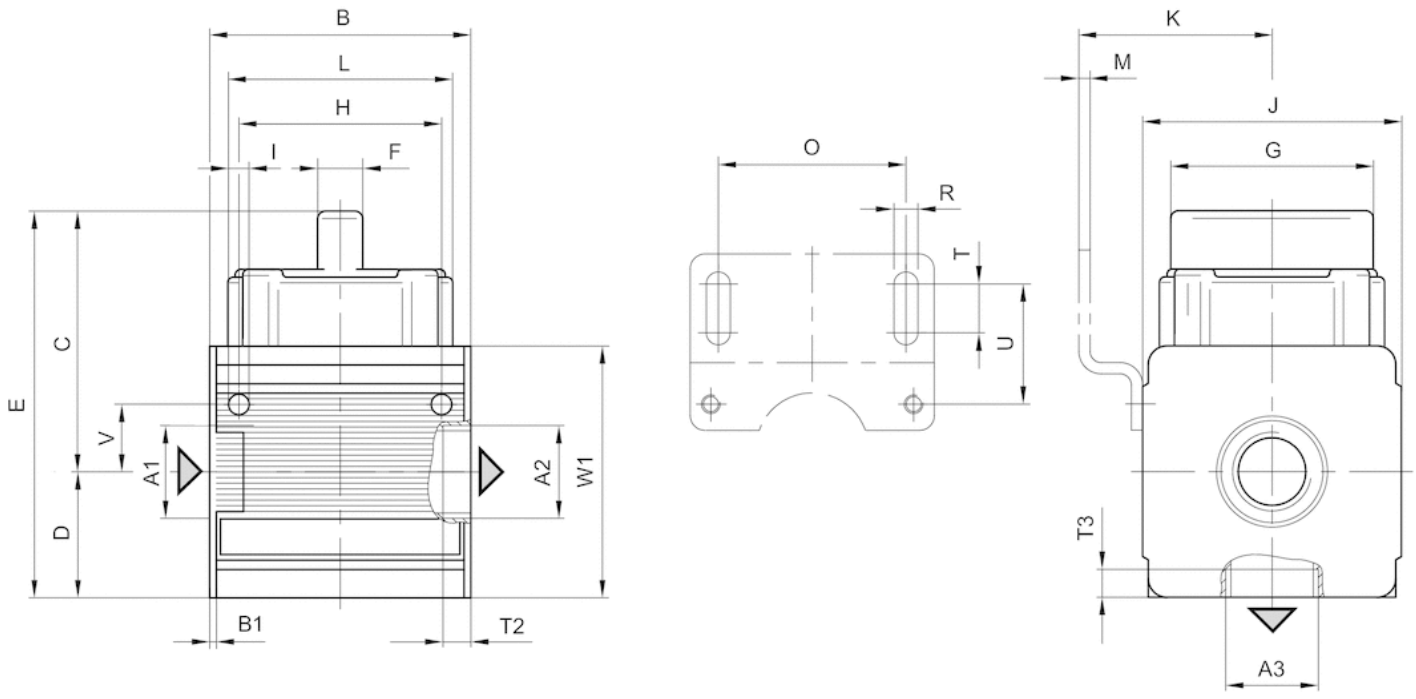

A1 = input
A2 = output

A3 = ventilation port

Dimensions in mm

A2	A3	B	B1	C	D	E	F	G	H	I	J	K	L	M	O	R	T	T2	T3	U	V	W1
G 1/4	G 1/4	48	1.5	54.5	26	80.5	8	33.5	36	4.4	47	43	40.5	3	38	5.4	8	8	8	27.5	12.3	52
G 3/8	G 1/4	48	1.5	54.5	26	80.5	8	33.5	36	4.4	47	43	40.5	3	38	5.4	8	7.5	8	27.5	12.3	52