IG6108

Inductive sensor

IGK3008A1PKG/0,2M

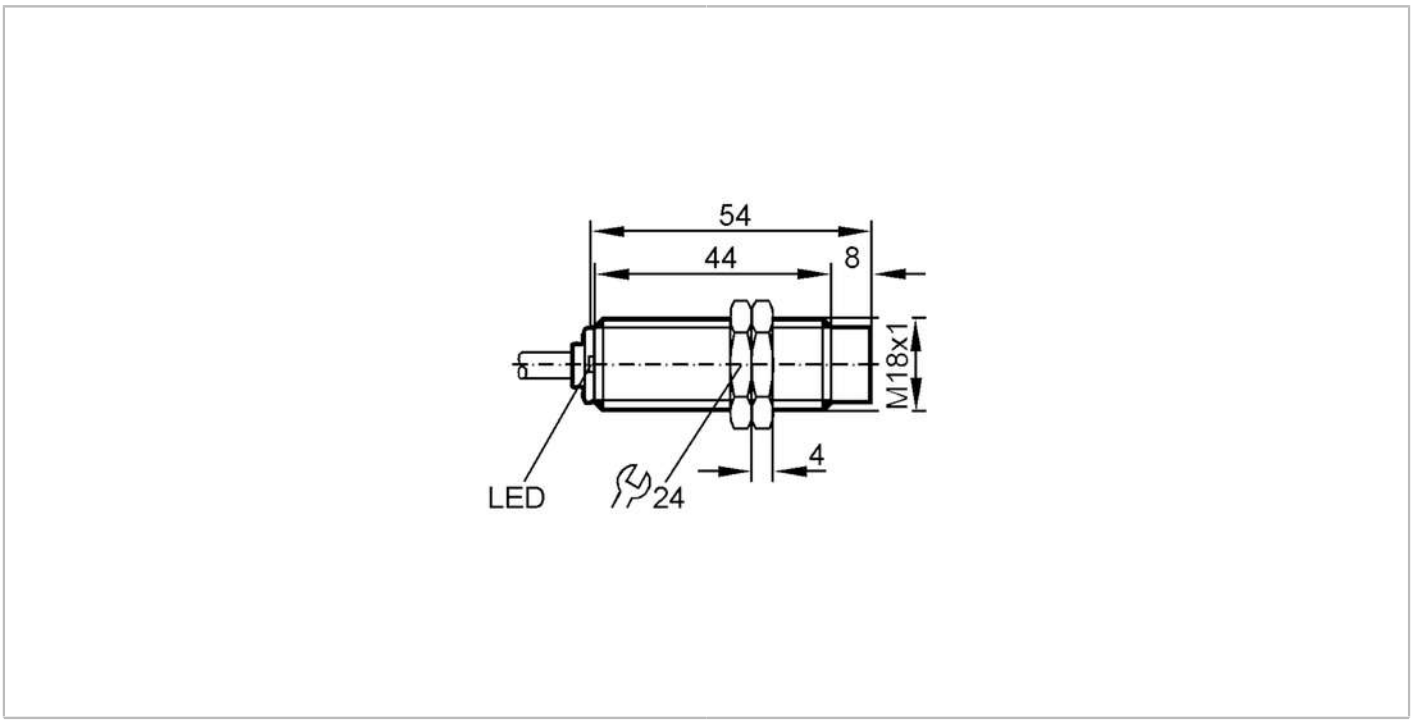

Product characteristics		
Housing		threaded type
Dimensions	[mm]	M18 x 1
Electrical data		
Operating voltage	[V]	15...30 DC
Current consumption	[mA]	< 20
Protection class		II
Reverse polarity protection		yes
Outputs		
Analogue current output	[mA]	4...20; (linear; gradient: 2,22 mA/mm; for frontal approach and for target made of mild steel: 24 x 24 x 1 mm)
Max. load	[Ω]	500
Short-circuit protection		yes
Overload protection		yes
Detection zone		
Measuring range	[mm]	0.8...8
Accuracy / deviations		
Correction factor		steel: 1 / stainless steel: 0.7 / brass: 0.5 / aluminium: 0.4 / copper: 0.3
Linearity error of analogue output	[%]	± 1 %; (of IA max)
Repeatability analogue output	[%]	± 1 %; (of IA max)
Response times		
Response time	[ms]	< 10

IG6108

Inductive sensor

IGK3008A1PKG/0,2M

Operating conditions			
Ambient temperature	[°C]	-25...80	
Protection		IP 67	
Tests / approvals			
MTTF	[years]	936	
Mechanical data			
Weight	[g]	87	
Housing		threaded type	
Mounting		non-flush mountable	
Dimensions	[mm]	M18 x 1	
Thread designation		M18 x 1	
Materials		housing: brass white bronze coated; sensing face: PBT	
Tightening torque	[Nm]	25	
Displays / operating elements			
Display		within the operating range	1 x LED, yellow lights
		outside the operating range	1 x LED, yellow flashing
Accessories			
Items supplied		lock nuts: 2	
Remarks			
Pack quantity		1 pcs.	
Electrical connection			

Cable: 0.2 m, PVC; 3 x 0.5 mm²

Connection

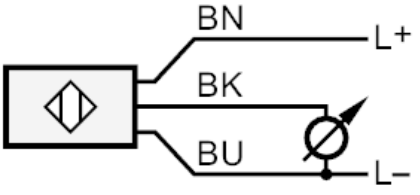

	Core colours :
BK =	black
BN =	brown
BU =	blue