Brand of NTN corporation

Technical data

ESFTE205

Bearing units



Grey cast housing, radial insert ball bearing with eccentric locking collar, single lip seal

KIT CONTENT

ES205G2, FTE205

VISUAL (S)

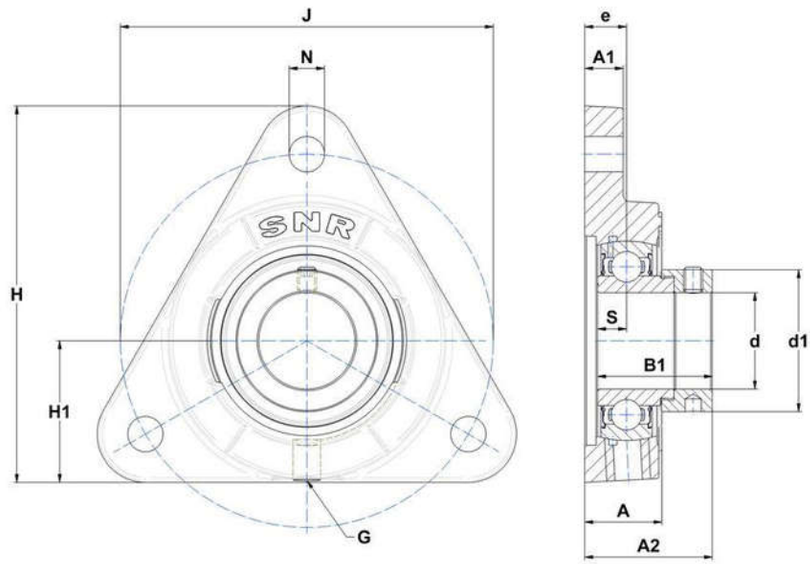

PRODUCT DEFINITION

Brand	SNR
A - Housing height	22 mm
A1 - Housing foot height / flange height	12 mm
A2 - Total height from mounting surface	36 mm
B - Width of Inner Ring	21,4 mm
B1 - Overall width Inner Ring	30,9 mm

PRODUCT DEFINITION	
d - Shaft diameter	25 mm
d1 - Outer dia of eccent. Lock. collar / nut of adapter sleeve	37,4 mm
e - Distance mounting surface to bearing center	12,6 mm
G - Grease fitting	R1/8"
H - Housing length, width or diameter	97 mm
H1 - Distance housing side to centre of bearing insert	36 mm
J - Mounting holes distance	96 mm
N - Mounting hole dimension	11 mm
S - Distance front side/bearing centre	7,5 mm

PRODUCT PERFORMANCE	
C - Dynamic load rating	14000000 mN
C0 - Static load rating	7880000 mN
Operating temperature min.	253,15 °K
Operating temperature max.	373,15 °K

OTHER FEATURES	
Mass	0,59 kg
Recommended tightening torque for set screw	5.5 N-m