Doc. N.° 1SDH000719R0805 - ECN000174524 - Rev. C

SACE Tmax XT

ES - Terminali anteriori divaricati per interruttore fisso/parte fissa XT1-XT2-XT3-XT4
ES - Front terminals splayed for fixed circuit- breaker/fixed part XT1-XT2-XT3-XT4
ES - Vorderseitige verbreiterte Anschlüsse, für Leistungsschalter in fester Ausführung/ Unterteil XT1-XT2-XT3-XT4
ES - Prises avant épanouies pour disjoncteur fixe/ partie fixe XT1-XT2-XT3-XT4
ES - Terminales frontales separadores para interruptor fijo parte fija XT1-XT2-XT3-XT4

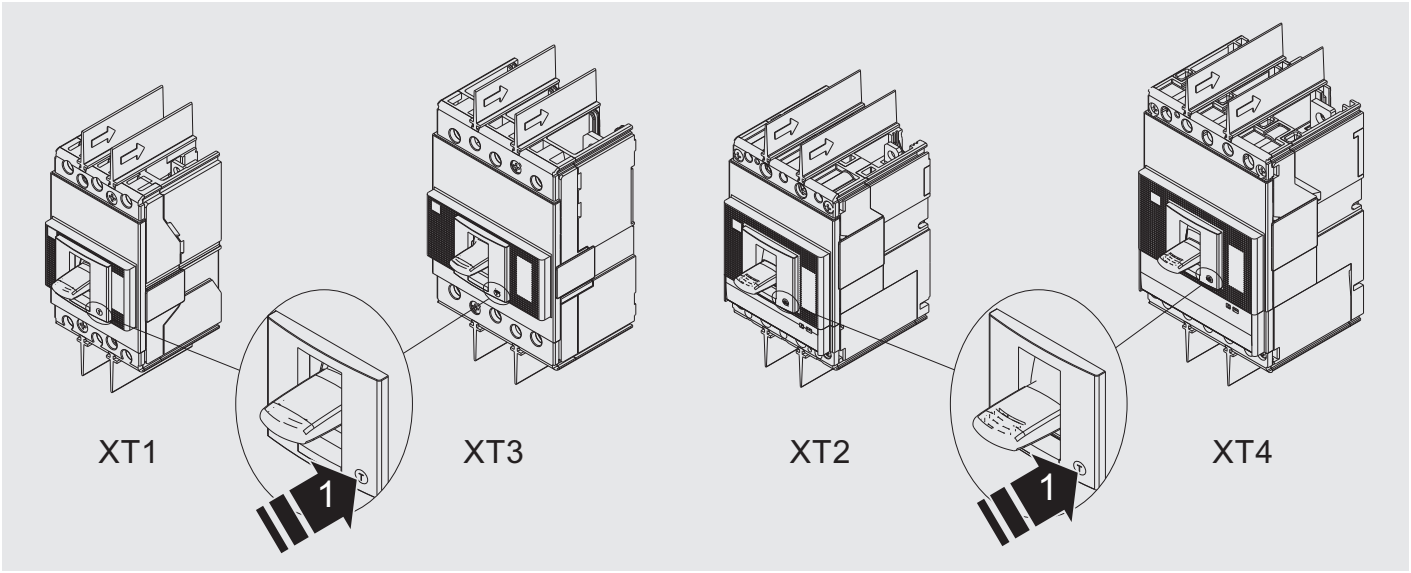

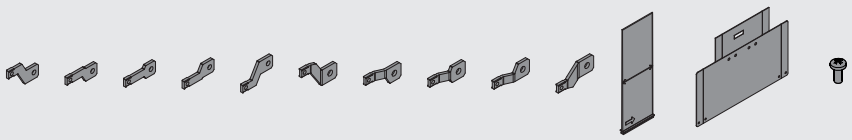

F-P-W	XT1	III	1(2)	/	1(2)	/	1(2)	/	/	/	/	/	2(4)	/	/
		IV	1(2)	1(2)	/	1(2)	1(2)	/	/	/	/	/	3(6)	/	/
	XT2	III	/	/	/	/	/	1(2)	/	1(2)	/	1(2)	2(4)	1(2)	2(4)
		IV	/	/	/	/	/	1(2)	1(2)	/	1(2)	1(2)	3(6)	1(2)	2(4)
	XT3	III	/	/	/	/	/	1(2)	/	1(2)	/	1(2)	2(4)	/	/
		IV	/	/	/	/	/	1(2)	1(2)	/	1(2)	1(2)	3(6)	/	/
	XT4	III	/	/	/	/	/	1(2)	/	1(2)	/	1(2)	2(4)	1(2)	2(4)
		IV	/	/	/	/	/	1(2)	1(2)	/	1(2)	1(2)	3(6)	1(2)	2(4)

A

ONLY FOR XT1 F - XT3 F

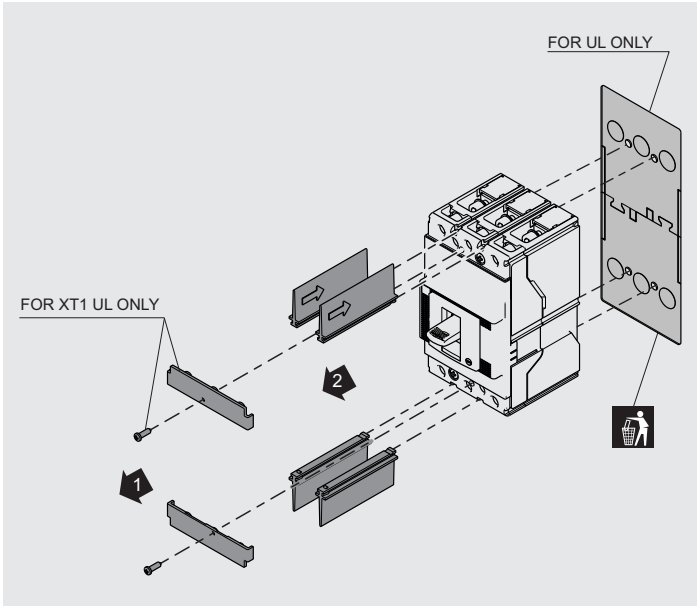

B

ONLY FOR XT2 F- XT4 F

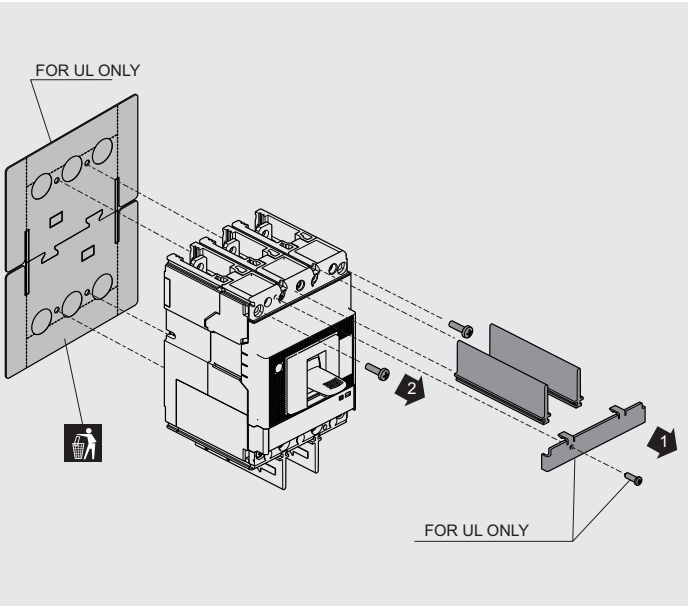

C

XT1 III

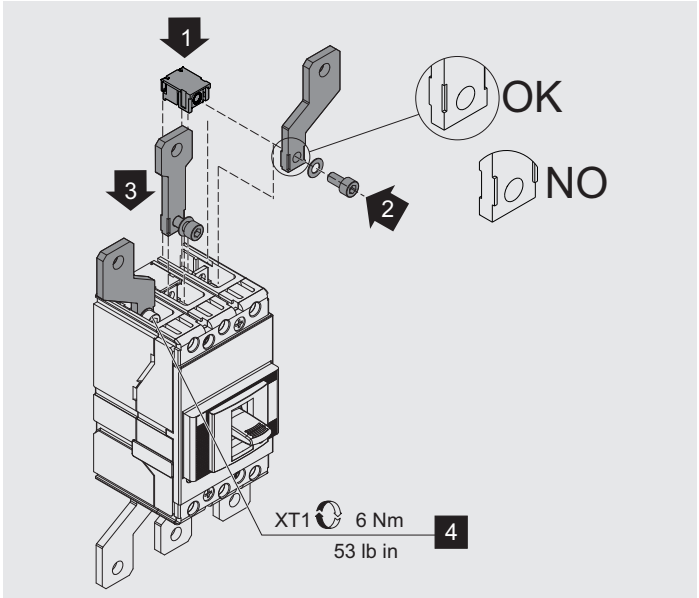

D

XT2-XT3-XT4 III

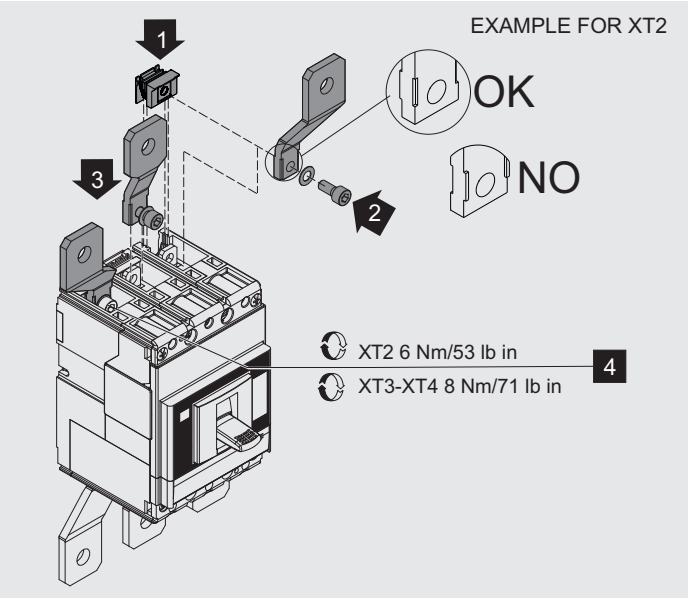

E

XT1-XT2-XT3-XT4 IV

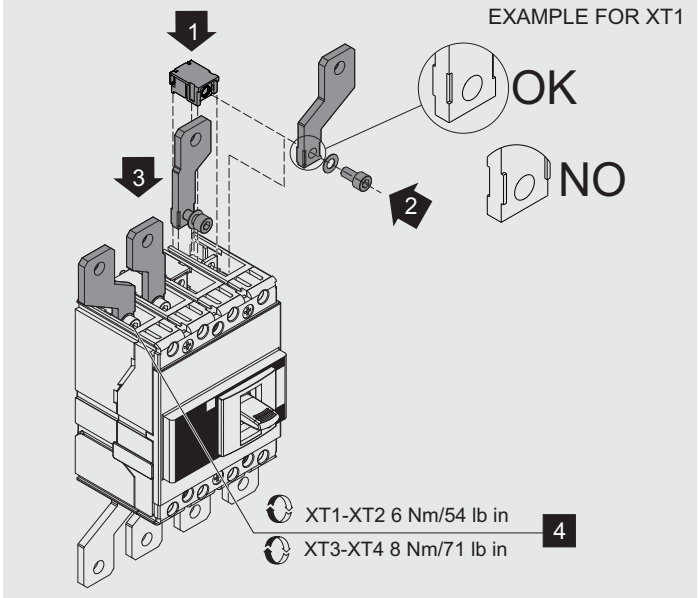

F

XT1F-XT3F III

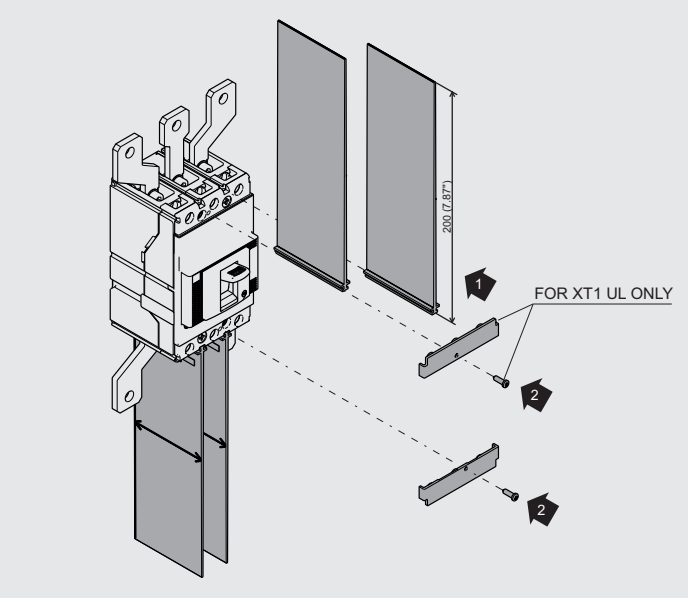

G XT1F-XT3F IV

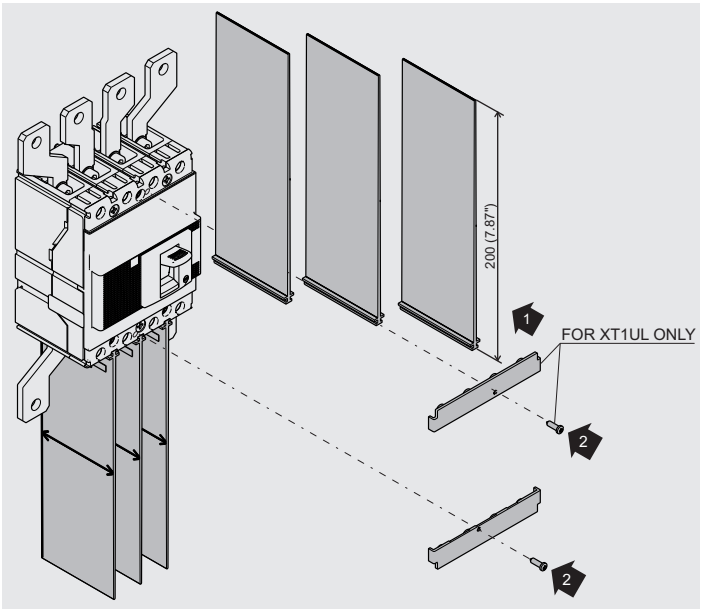

H XT2F-XT4F III

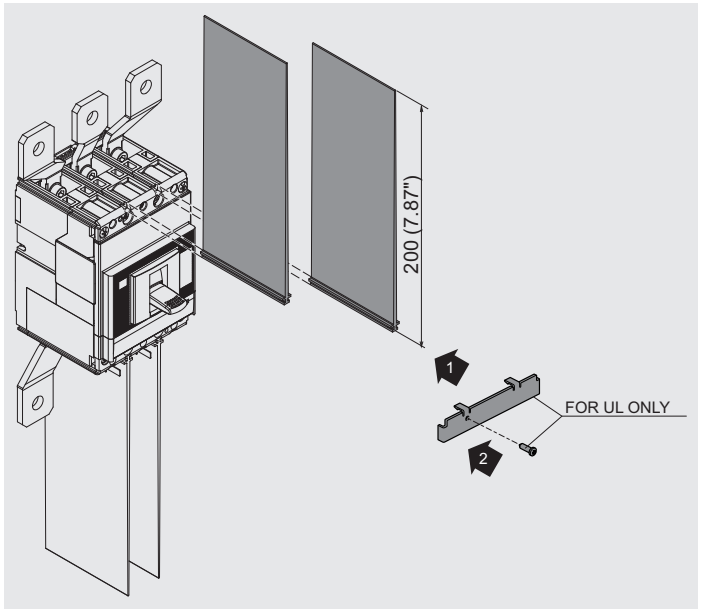

I XT2F-XT4F IV

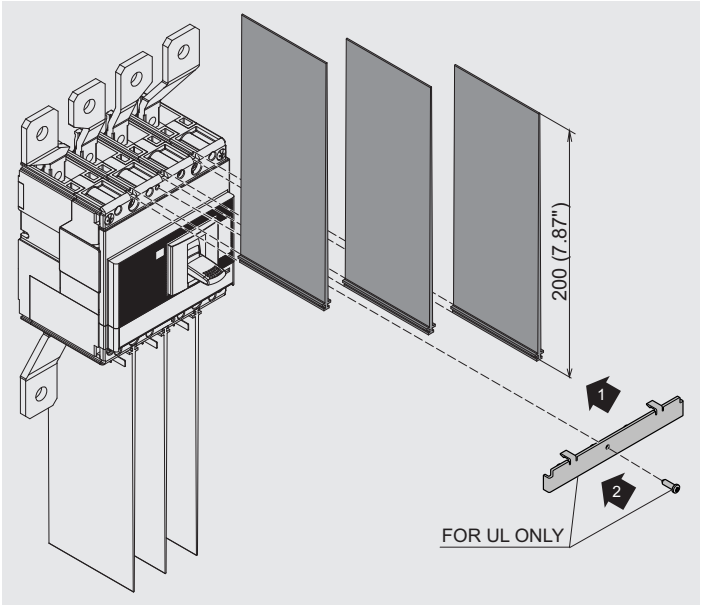

J XT2-XT4 III ONLY

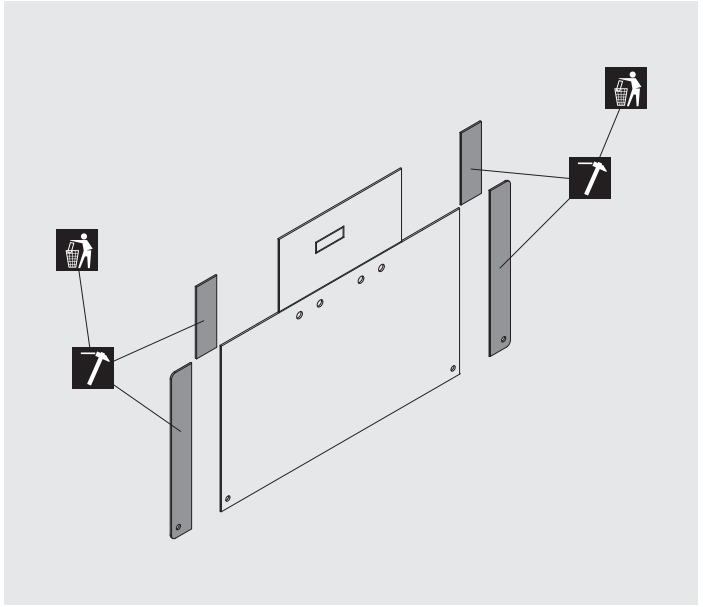

K XT2-XT4 III

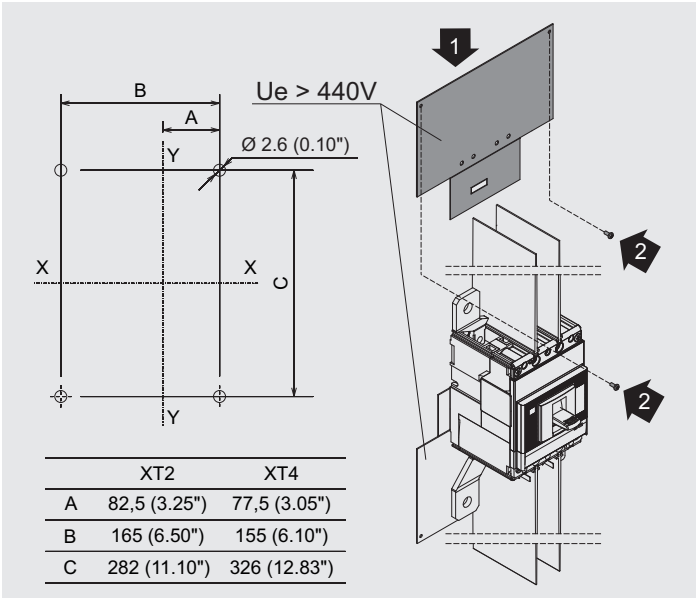

	XT2	XT4
A	82,5 (3.25")	77,5 (3.05")
B	165 (6.50")	155 (6.10")
C	282 (11.10")	326 (12.83")

L XT2-XT4 IV

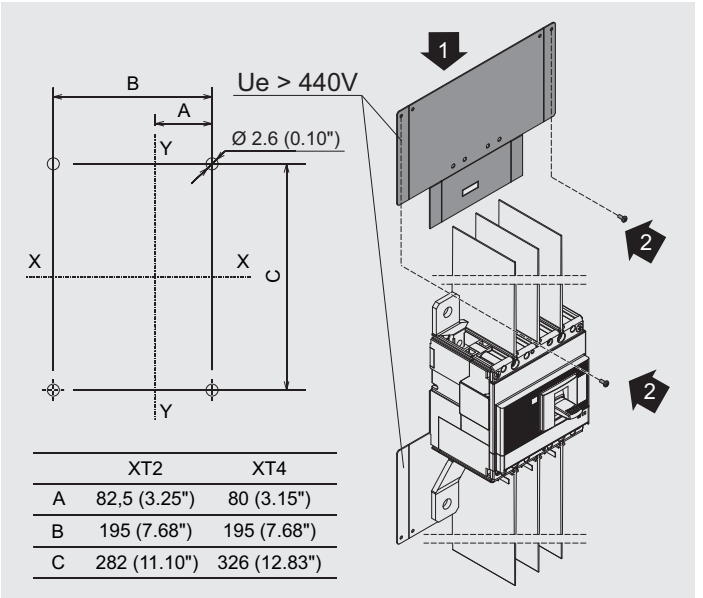

	XT2	XT4
A	82,5 (3.25")	80 (3.15")
B	195 (7.68")	195 (7.68")
C	282 (11.10")	326 (12.83")

M

XT1-XT2-XT3-XT4

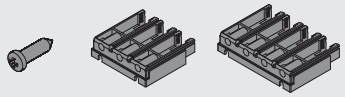

P-W	XT1	III	2(4)	1(2)	/
		IV	2(4)	/	1(2)
	XT2	III	2(4)	1(2)	/
		IV	2(4)	/	1(2)
	XT3	III	2(4)	1(2)	/
		IV	2(4)	/	1(2)
	XT4	III	2(4)	1(2)	/
		IV	2(4)	/	1(2)

N

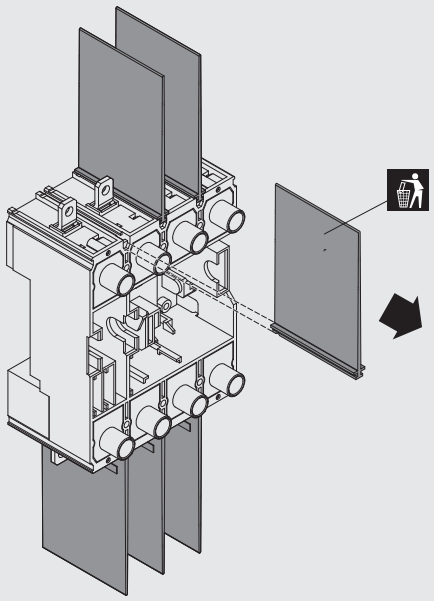

O

XT1-XT2-XT3-XT4

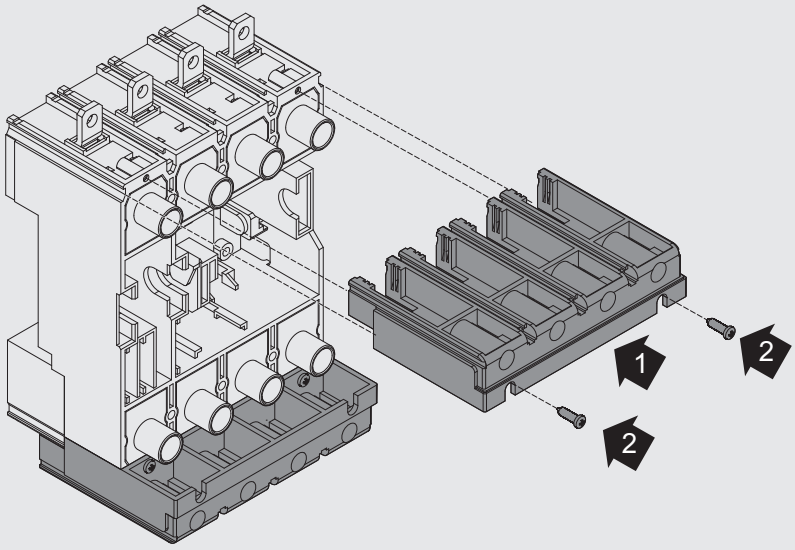

P XT1-XT2-XT3-XT4

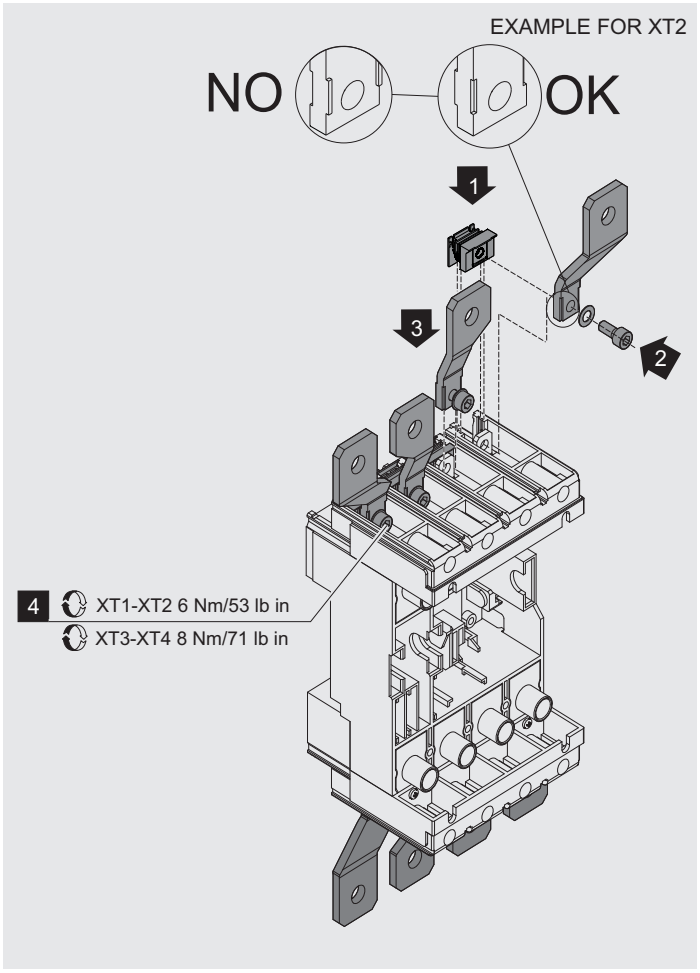

Q XT1-XT2-XT3-XT4

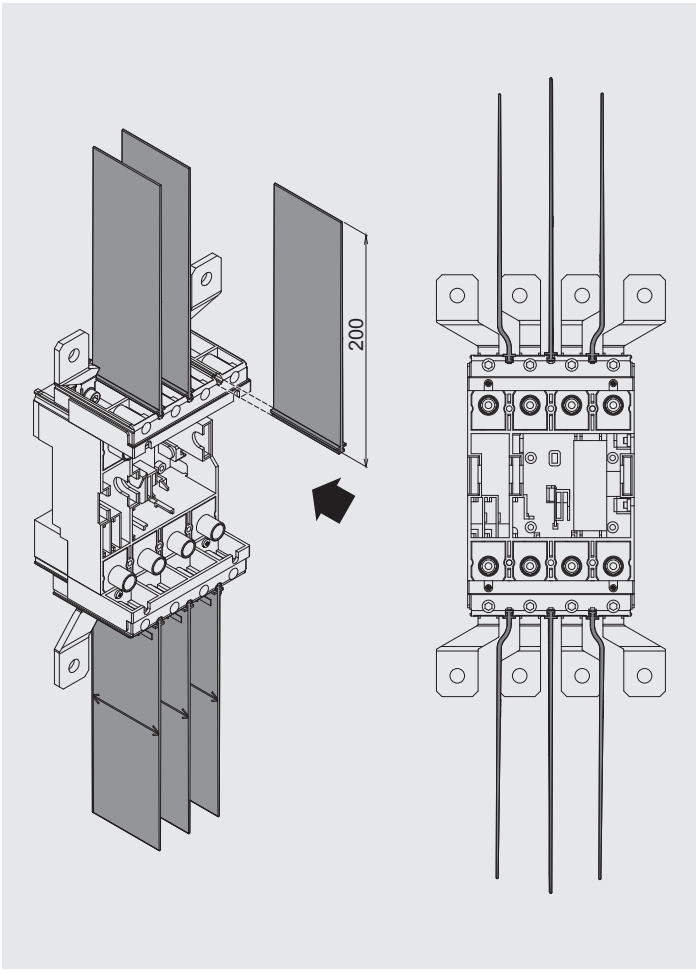

R XT2-XT4/P-W IV ONLY

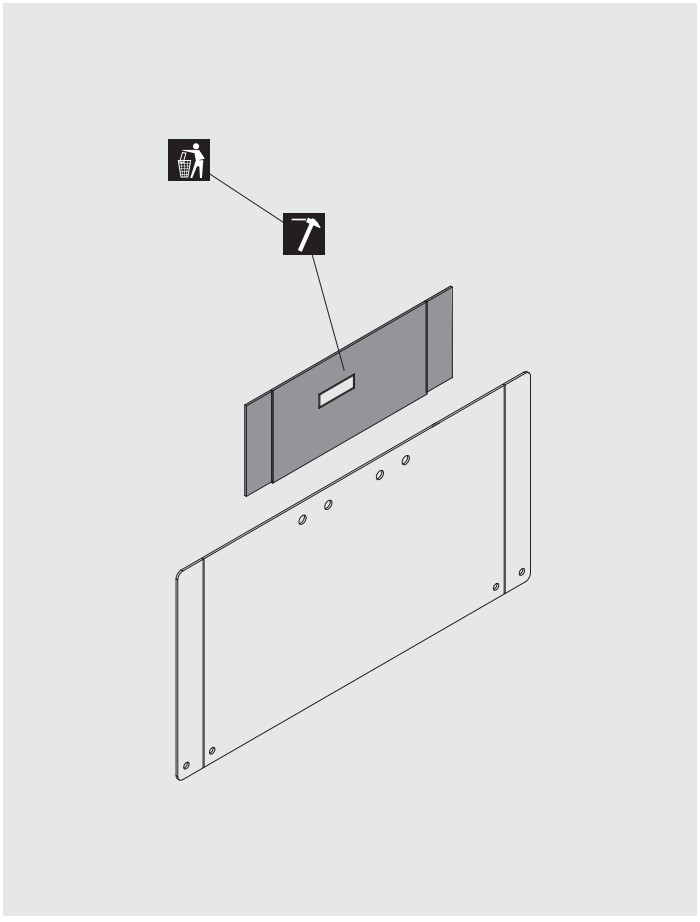

S XT2-XT4/P-W III ONLY

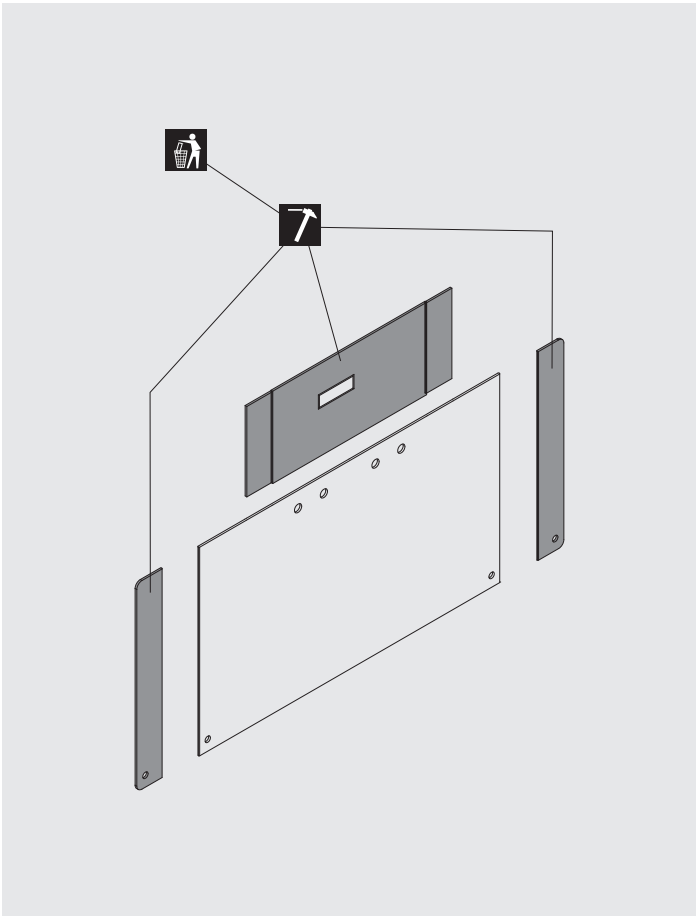

T

XT2-XT4 III / P-W

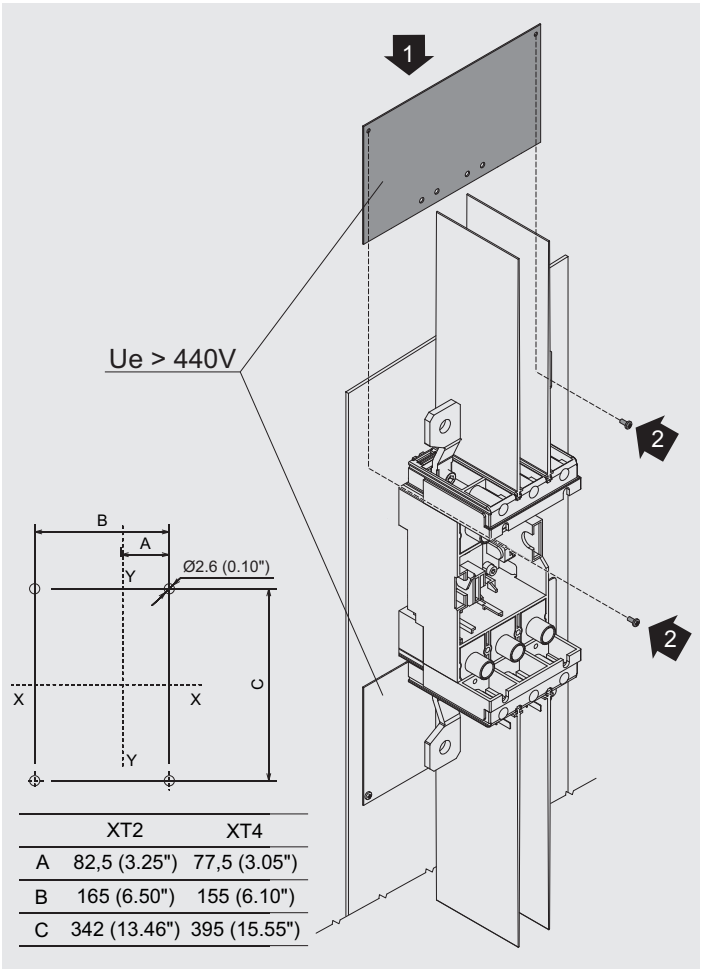

	XT2	XT4
A	82,5 (3.25")	77,5 (3.05")
B	165 (6.50")	155 (6.10")
C	342 (13.46")	395 (15.55")

U

XT2-XT4 IV / P-W

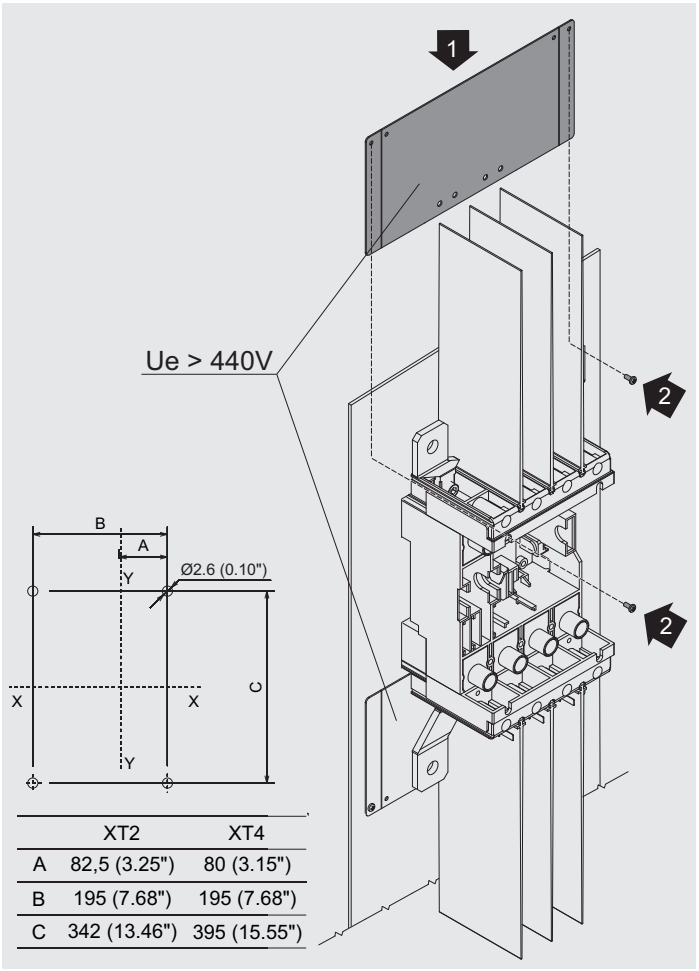

	XT2	XT4
A	82,5 (3.25")	80 (3.15")
B	195 (7.68")	195 (7.68")
C	342 (13.46")	395 (15.55")

For more information please contact:
ABB S.p.A.
Via Pescaria, 5
24123 Bergamo - Italy
Phone: +39 035 395 111

© Copyright 2014 - 2021 ABB. All rights reserved.
www.abb.com