Adapter front bezel

Details

Dimensions / Details

Adapter front bezel, 60 x 50 mm [2.36 x 1.97“]

with screw mounting, incl. gasket
for counters 48 x 24 mm [1.89 x 0.94“]

cut-out:

for cut-out 54 x 29 mm [2.13 x 1.14“]
to cut-out 45 x 22.2 mm [1.77 x 0.94“]

suitable for:

Codix 13x, 14x, 52x, 53x,
W 15.5, W 16.5, W 17.5,
H 37, H 37.5

black

Order-No.

N003001



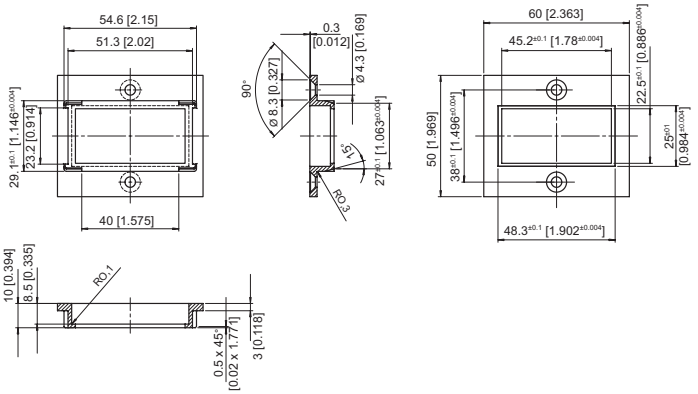

Adapter front bezel, 48 x 48 mm [1.89 x 1.89“]

with clip mounting
for counters 48 x 24 mm [1.89 x 0.94“]

cut-out:

for cut-out 45 x 45 mm [1.77 x 1.77“]
to cut-out 45 x 22.2 mm [1.77 x 0.94“]

suitable for:

Codix 13x, 14x, 52x, 53x,
W 15.5, W 16.5, W 17.5,
H 37, H 37.5

black

Order-No.

T008883



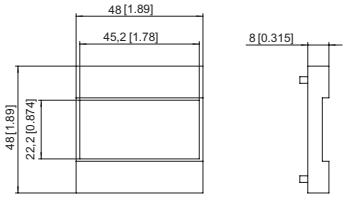

Adapter front bezel, 55 x 55 mm [2.16 x 2.16“]

with clip mounting
for counters 48 x 48 mm [1.89 x 1.89“]

cut-out:

for cut-out 50 x 50 mm [1.97 x 1.97“]
or ø 50.5 mm [1.99“]
to cut-out 45 x 45 mm [1.77 x 1.77“]

suitable for:

Codix 716 / 717,
H 57, HC 77, HW 66, HW 66 M

grey
black

Order-No.

T008170
T008171



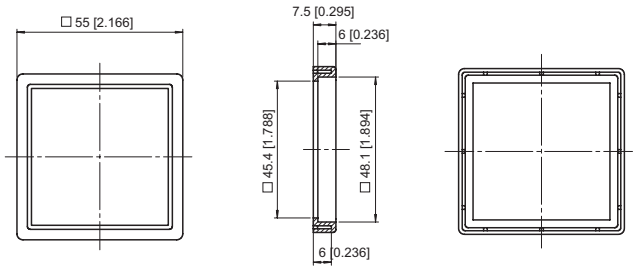

Adapter front bezel, 55 x 55 mm [2.16 x 2.16“]

with clip mounting
for counters 48 x 48 mm [1.89 x 1.89“]

cut-out:

for cut-out 50 x 50 mm [1.97 x 1.97“]
to cut-out 45 x 45 mm [1.77 x 1.77“]

suitable for:

901, Codix 716 /7 17,
Codix 923 / 924, Codix 907 / 908,
H 57, HC 77, HW 66

black

Order-No.

T008853



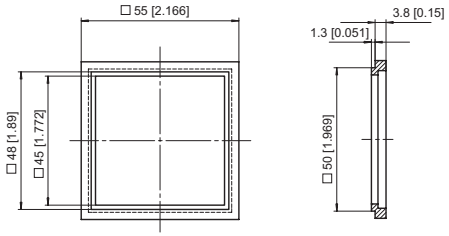

Dimensions in mm [inch]

© Fritz Kübler GmbH, subject to errors and changes. 10/2013