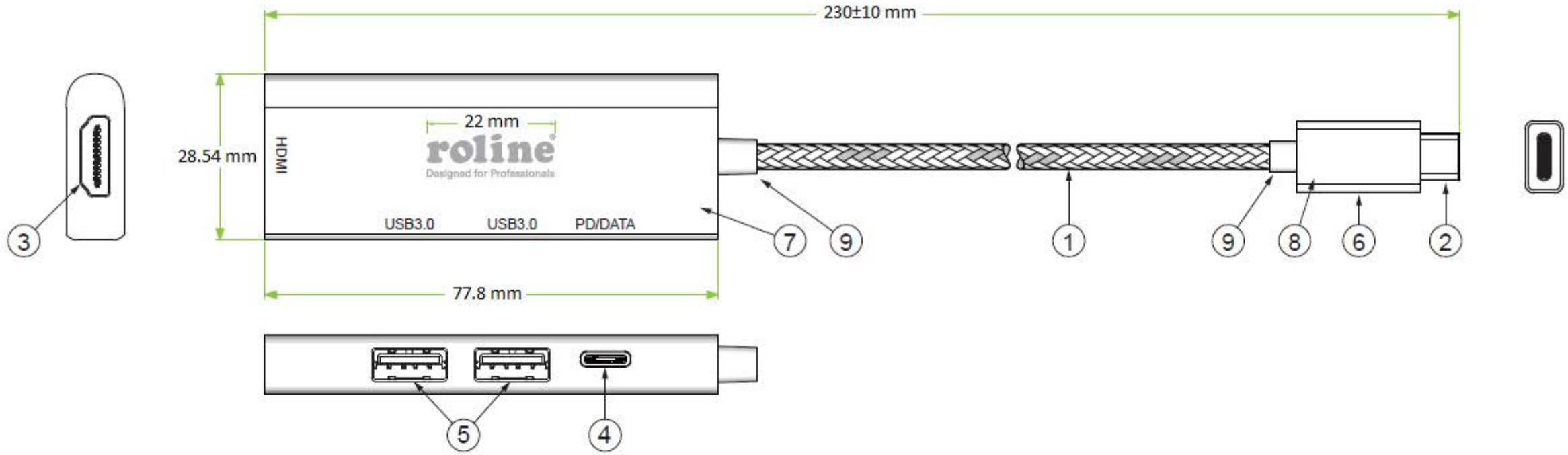

HDMI Resolution: 3480x2160@30Hz
Type C Receptacle: PD Charge: 20V 3A and DataTransfer

Specification：

1.	Cable	UL 20276, (34AWG*1P+AL+MY)*5+34AWG*3C+28AWG*1C+24AWG*2C+AL+B Jacket(with Braid) Color: Black, OD: 4.2±0.15mm
2.	Conn.	USB Type C Plug, Conductor: Gold Plated, Shell: Gold Plated, Insulator: Black
3.	Conn.	HDMI Receptacle, Conductor: Gold Plated, Shell: Nickel Plated, Insulator: Black
4.	Conn.	Type C Receptacle, Conductor: Gold Plated, Shell: Nickel Plated, Insulator: Black
5.	Conn.	USB 3.0 A Receptacle, Conductor: Gold Plated, Shell: Nickel Plated, Insulator: Blue
6.	Hood	For Type C Plug, Aluminum, Color: Gold
7.	Case	For Board, Aluminum, Color: Gold
8.	Inner Molding	LDPE
9.	Outer Molding	Black PVC: 45P

SECOMP

Drawing Date : 2019/07/30

		Approve	Check	Draw	Design
Product Name	ROLINE GOLD USB 3.2 Gen1 Type-C Dock HDMI+2xUSB 3.0+1xC	Allen	Allen	Kuan	Kuan
Product No.	12.02.1119		Scale 1:1	Unit : mm	

Rev.	Date	Contents of Change	Design
1			
2			
3			