Fastening Technology

BMS CS-M-D12-IZ
Order Code: BAM0031

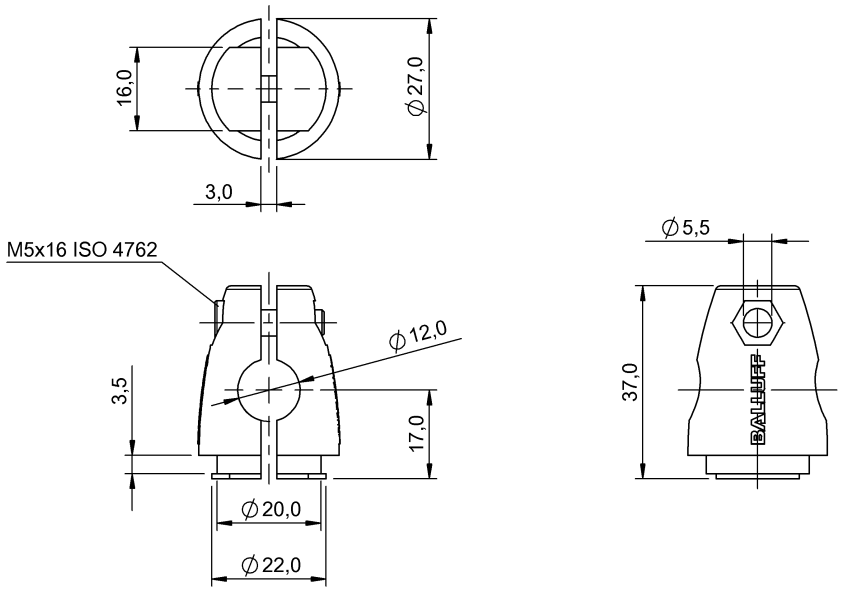

Basic features

Principle of operation	Mounting system
Scope of delivery	Clamp holder (1x) Nut ISO 4032-M5 Screw ISO 4762-M5x16
Style	Cylinder clamp
Use	for mounting system BMS for holding rods with Ø12 mm

Material

Housing material	Zinc, Die casting

Mechanical data

Dimension	Ø 27 x 37 mm
Mounting part	Screws, clamps