E33405

Process adapter Tri-Clamp

ADAPT G1/2 - 3A/DN38

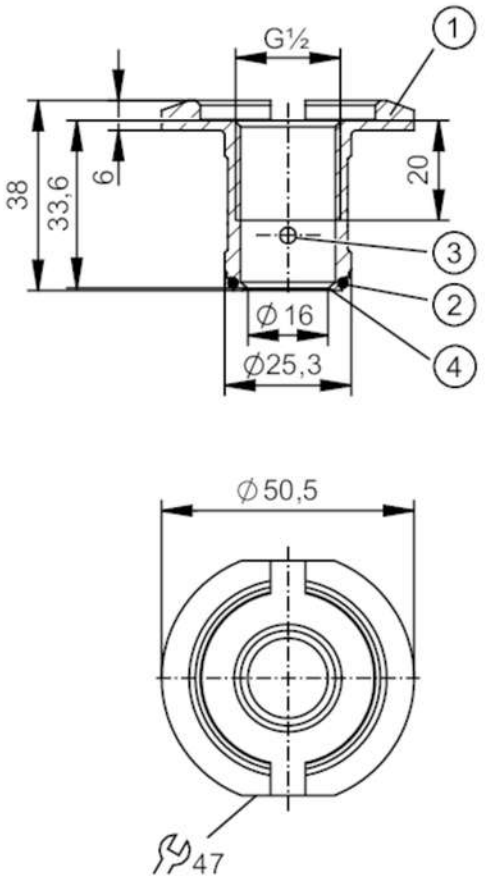

1 Adapter
2 Gasket
3 Leakage port
4 sealing edge

EC 1935/2004

Application		
Pressure rating	[bar]	25
Tests / approvals		
Pressure Equipment Directive		A possible classification to PED depends on the application and has to be carried out by the user / operator.
Pressure Equipment Directive EAC		The adapter is intended for use in devices, machines and installations that do not fall under the categories of the technical rule TR CU 032/2013.
Safety instructions		The compatibility between medium and product material has to be checked in all applications.
Mechanical data		
Weight	[g]	142.5
Materials		stainless steel (1.4404 / 316L)
Sensor connection		G 1/2 sealing cone
Process connection		Clamp DN38 (1,5")
Surface characteristics Ra/Rz of the wetted parts		< 0.8 / 8
Sealing		metal to PEEK

E33405

Process adapter Tri-Clamp

ADAPT G1/2 - 3A/DN38

Hygienic equipment class to DIN 11866	H3
Accessories	
Items supplied	O-ring: 1, EPDM
Remarks	
Pack quantity	1 pcs.