# Clevis mounting MP2, Series CM1

**3682908590**



**AVENTICS Clevis mountings**



## Technical data

| | |
|---|---|
| Industry | Industrial |
| Version | Corrosion-resistant version<br>Suitable for robust mechanical engineering applications |
| Standardization | ISO 15552 |
| Piston diameter | 80 mm |
| Weight | 0.574 kg |

## Material

| | |
|---|---|
| Material | Aluminum |
| Surface | forged and anodized |
| Screws material | Stainless Steel |
| Bearing material | Plastic |
| Part No. | 3682908590 |

# Clevis mounting MP2, Series CM1

3682908590



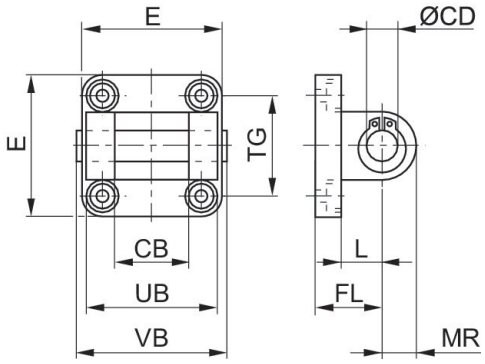


| Cylinders Ø | Part No. | CB H14 | Ø CD H9 | E max. | FL | L min. | MR | UB h14 | VB |
|---|---|---|---|---|---|---|---|---|---|
| 32 | 3682903590 | 26 | 10 | 47 | 22 ±0,2 | 12 | 10 | 45 | 50 |
| 40 | 3682904590 | 28 | 12 | 54 | 25 ±0,2 | 15 | 12 | 52 | 57 |
| 50 | 3682905590 | 32 | 12 | 65 | 27 ±0,2 | 15 | 12 | 60 | 65 |
| 63 | 3682906590 | 40 | 16 | 75 | 32 ±0,2 | 20 | 15 | 70 | 76 |
| 80 | 3682908590 | 50 | 16 | 94 | 36 ±0,2 | 20 | 17 | 90 | 96 |
| 100 | 3682910590 | 60 | 20 | 112 | 41 ±0,2 | 25 | 21 | 110 | 117 |
| 125 | R412025571 | 70 | 25 | 138 | 50 | 30 | 26 | 130 | 140 |

| Cylinders Ø | TG |
|---|---|
| 32 | 32,5 ±0,2 |
| 40 | 38,0 ±0,2 |
| 50 | 46,5 ±0,2 |
| 63 | 56,5 ±0,2 |
| 80 | 72,0 ±0,2 |
| 100 | 89,0 ±0,2 |
| 125 | 110,0 ±0,3 |