Original Instructions

Smile 11 RA/-B
Smile 12 RF/-G
Reset button



Read and understand this User Manual

Please read and understand this manual before using the products. Please consult your ABB JOKAB SAFETY representative if you have any questions or comments.

WARRANTY

ABB JOKAB SAFETY guarantees that the products are free from defects in materials and workmanship for a period of one (1) year (or other period if specified) from the date of sale by ABB JOKAB SAFETY.

ABB JOKAB SAFETY MAKES NO WARRANTY OR REPRESENTATION, EXPRESSED OR IMPLIED, REGARDING NON-INFRINGEMENT, MERCHANTABILITY, OR FITNESS FOR PARTICULAR PURPOSE OF THE PRODUCTS, ANY BUYER OR USER ACKNOWLEDGES THAT THE BUYER OR USER ALONE HAS DETERMINED THAT THE PRODUCTS WILL SUITABLY MEET THE REQUIREMENTS OR THEIR INTENDED USE. ABB JOKAB SAFETY DISCLAIMS ALL OTHER WARRANTIES, EXPRESSED OR IMPLIED.

LIMITATIONS OF LIABILITY

ABB JOKAB SAFETY SHALL NOT BE RESPONSIBLE FOR SPECIAL, INDIRECT, OR CONSEQUENTIAL DAMAGES, LOSS OF PROFITS OR COMMERCIAL LOSS IN ANY WAY CONNECTED WITH THE PRODUCTS, WHETHER THE CLAIM IS BASED ON CONTRACT, WARRANTY, NEGLIGENCE, OR STRICT LIABILITY.

In no event shall responsibility of ABB JOKAB SAFETY for any act exceed the individual price of the product on which liability is asserted.

IN NO EVENT SHALL ABB JOKAB SAFETY BE RESPONSIBLE FOR WARRANTY, REPAIR, OR OTHER CLAIMS REGARDING THE PRODUCTS UNLESS ABB JOKAB SAFETY'S ANALYSIS CONFIRMS THAT THE PRODUCTS WERE PROPERLY HANDLED, STORED, INSTALLED, AND MAINTAINED AND NOT SUBJECT TO ABUSE, MISUSE, OR INAPPROPRIATE MODIFICATION OR REPAIR.

SUITABILITY FOR USE

ABB JOKAB SAFETY shall not be responsible for conformity with any standards, codes, or regulations that apply to the combination of products in the customer's application or use of the product. At the customer's request, ABB JOKAB SAFETY will provide applicable third party certification documents identifying ratings and limitations of use that apply to the products. This information by itself is not sufficient for a complete determination of the suitability of the products in combination with the end product, machine, system, or other application or use.

The following are some examples of applications for which particular attention must be given. This is not intended to be an exhaustive list of all possible uses of the products, nor is it intended to imply that the uses listed may be suitable for the products:

Outdoor use, uses involving potential chemical contamination or electrical interference, or conditions or uses not described in this manual.

Nuclear energy control systems, combustion systems, railroad systems, aviation systems, medical equipment, amusement machines, vehicles, and installations subject to separate industry or government regulations.

Systems, machines, and equipment that could present a risk to life or property.

Determine and observe all prohibitions of use applicable to the products.

NEVER USE THE PRODUCTS FOR AN APPLICATION INVOLVING SERIOUS RISK TO LIFE OR PROPERTY WITHOUT ENSURING THAT THE SYSTEM AS A WHOLE HAS BEEN DESIGNED TO ADDRESS THE RISKS, AND THAT THE ABB JOKAB SAFETY PRODUCT IS PROPERLY RATED AND INSTALLED FOR THE INTENDED USE WITHIN THE OVERALL EQUIPMENT OR SYSTEM.

PERFORMANCE DATA

While every effort has been taken to ensure the accuracy of the information contained in this manual, ABB JOKAB SAFETY cannot accept responsibility for errors or omissions and reserves the right to make changes and improvements without notice. Performance data given in this document are provided as a guide for the user in determining suitability and does not constitute a warranty. It may represent the result of ABB JOKAB SAFETY'S test conditions, and the users must correlate it to actual application requirements. Actual performance is subject to the ABB JOKAB SAFETY Warranty and Limitations of Liability.

Table of Contents

1 Introduction 4

Purpose 4

Target group 4

Prerequisites 4

Special notes 4

2 Overview 5

General description 5

Safety instructions 5

3 Electrical connections 6

Smile 11 RA 6

Smile 11 RB 6

Smile 12 RF 6

Smile 12 RG 7

M12 connector 7

4 Installation and maintenance 8

Installation instructions 8

Maintenance 8

5 Operation 9

LED indication 9

6 Model overview 10

Measurements 10

7 Technical data 11

1 Introduction

Purpose

The purpose of these instructions is to describe the models Smile 11 RA/-B, and Smile 12 RF/-G of the Smile push button box, and provide the necessary information for installation and operation. The information applies to all models unless otherwise specified in the manual.

Target group

This document is intended for authorised installation personnel.

Prerequisites

It is assumed that the reader of this document has:

- Basic knowledge of ABB Jokab Safety products.
- Knowledge of machine safety.

Special notes

Pay attention to the following special notes in the document:

⚠ **Warning!**	Risk of severe personal injury! Failure to carry out an instruction or procedure correctly, may result in injury to the operator or other personnel.
Caution!	Risk of damage to the equipment! Failure to carry out an instruction or procedure correctly, may result in damage to the equipment.
NB!	Notes are used to provide important or explanatory information.

2 Overview

General description

The Smile push button box is designed for use as a reset button in safety circuits.

Smile 11 RA is a push button box with a normally open circuit for resetting and one input for connecting the LED in the push button.

Smile 11 RB is a push button box designed for use together with a Pluto safety PLC. The Safety PLC Pluto has a feature called “light button” that is used to reduce the number of connections on Pluto. This feature means one connection can be used both as an input for resetting and an output for the LED. The feature requires a special connection for the reset button and its LED indicator, which Smile 11 RB provides.

Smile 12 RF is a push button box designed for use together with Eden Dyn-Reset and Eden OSSD-Reset with 5 pin M12 connector.

Smile 12 RG is a resetting push button box designed for use together with Eden OSSD-Reset with 8 pin M12 connector.

Safety instructions

Warning!

Carefully read through the entire user manual before using the device.

Products must be installed by a qualified electrician. Safety instructions, given standards and the machinery directive must be followed.

Failure to follow the instructions, use contrary to these instructions as well as incorrect installation or handling of the product can affect the safety of personnel and equipment.

Specific instructions for installation and prescribed use of the product given in the user manual must be carefully followed and relevant technical standards observed.

Failure to comply with the instructions or standards, especially when tampering with and/or modifying the product, voids all liability.

3 Electrical connections

Smile 11 RA

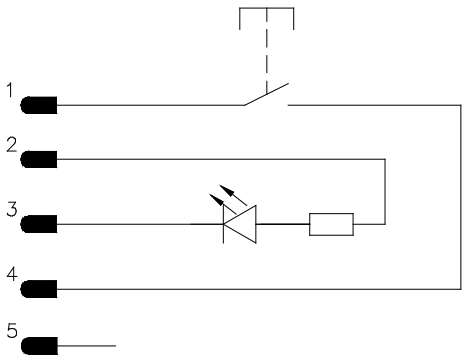

M12 connector 5 pin:

1) Brown
2) White
3) Blue
4) Black
5) Grey

Smile 11 RB

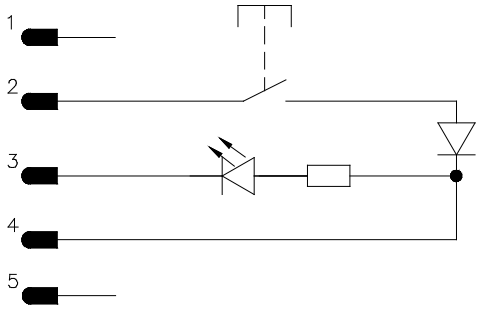

M12 connector 5 pin:

1) Brown
2) White
3) Blue
4) Black
5) Grey

Smile 12 RF

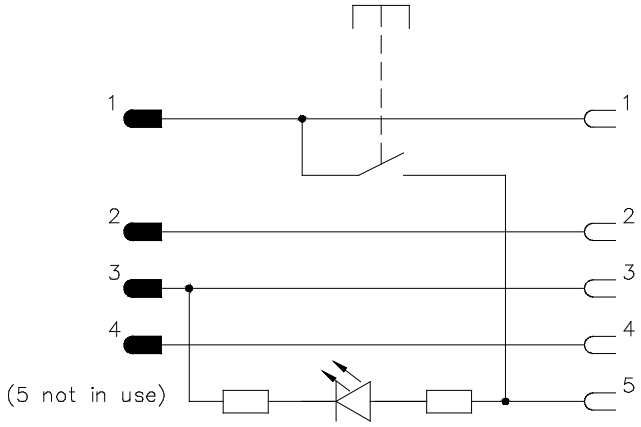

M12 connector 5 pin:

1) Brown
2) White
3) Blue
4) Black
5) Grey

Smile 12 RG

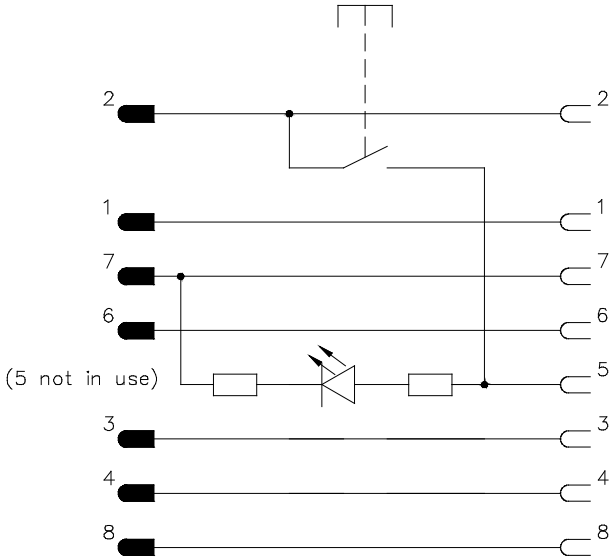

M12 connector 8-pin:

1) White
2) Brown
3) Green
4) Yellow
5) Pink
6) Blue
7) Red
8) Black

M12 connector

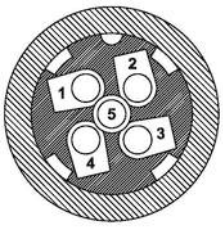

M12 5-pin male connector seen from the cable side

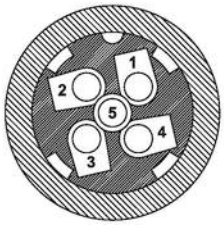

M12 5-pin female connector seen from the cable side

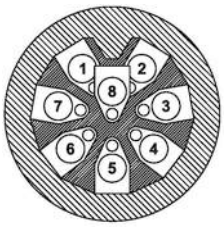

M12 8-pin male connector seen from the cable side

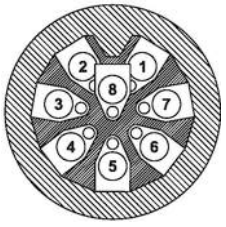

M12 8-pin female connector seen from the cable side

NB! A shielded cable is recommended between the Smile push button box and other electrical devices.

Caution! All cable colours according to ABB Jokab Safety standard cables.

4 Installation and maintenance

Installation instructions

1. Secure the Smile push button box to the surface with two M5 screws.
2. Connect the M12 connector.

⚠ **Warning!** The entire risk zone protected by the safety equipment must be possible to monitor from the position of the reset button. The safety circuit must never be broken without first ensuring that no one is in the risk zone.

⚠ **Warning!** The reset button must not be placed so that it can be accessed from a dangerous position (for example, by stretching an arm around a corner or a finger through a safety net)

Maintenance

⚠ **Warning!** The safety functions and mechanism must be tested regularly, at least annually, to ensure that all the safety functions work properly.

⚠ **Warning!** In the event of a functional stop or damage to the product contact your nearest ABB Jokab Safety representative/distributor. Do not try to repair the product yourself since it may cause permanent damage to the product and impair product safety with the risk of serious personal injury.

Caution! ABB Jokab Safety assumes no responsibility for malfunctioning of the emergency stop if the installation and maintenance requirements described in this manual are not followed. These requirements are included in the product warranty.

5 Operation

LED indication

LED indication is determined by the PLC program or other connected device e.g. Eden.

NB! The table below describes the recommended use of the Smile push button box in a safety circuit.

LED	Indication	Description
LED in the button	On	The safety circuit is not ready to be reset.
	On-Off (flashing)	The safety circuit is ready to be reset.
	Off	The safety circuit is reset.

6 Model overview

Type	Part number	Description
Smile 11 RA	2TLA030053R0000	Smile push button box with normally open resetting and one input for connecting the LED.
Smile 11 RB	2TLA030053R0100	Smile push button box designed for use together with a Pluto safety PLC.
Smile 12 RF	2TLA030053R2600	Smile push button box designed for use together with Eden Dyn-Reset and Eden-OSSD-Reset with 5 pin M12 connector.
Smile 12 RG	2TLA030053R2700	Smile push button box designed for use together with Eden-OSSD-Reset with 8 pin M12 connector.

Measurements

Smile 11 RA/-B

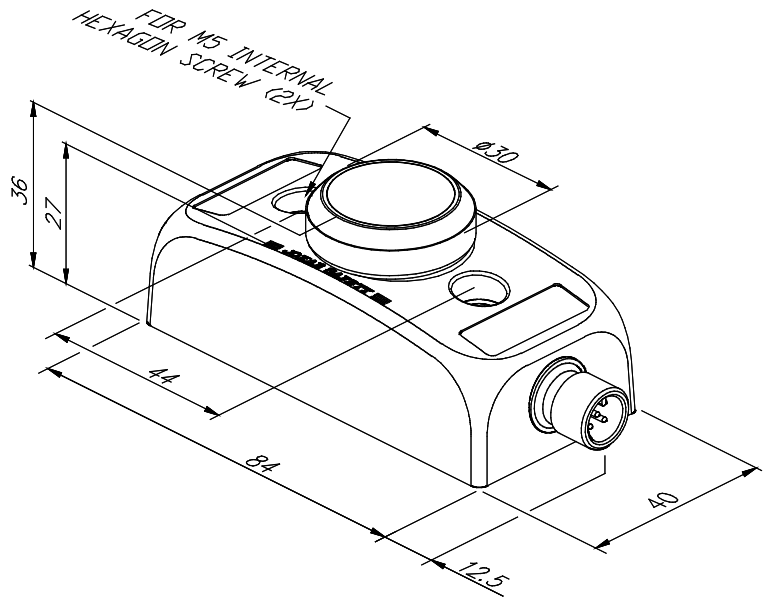

Smile 12 RF/-G

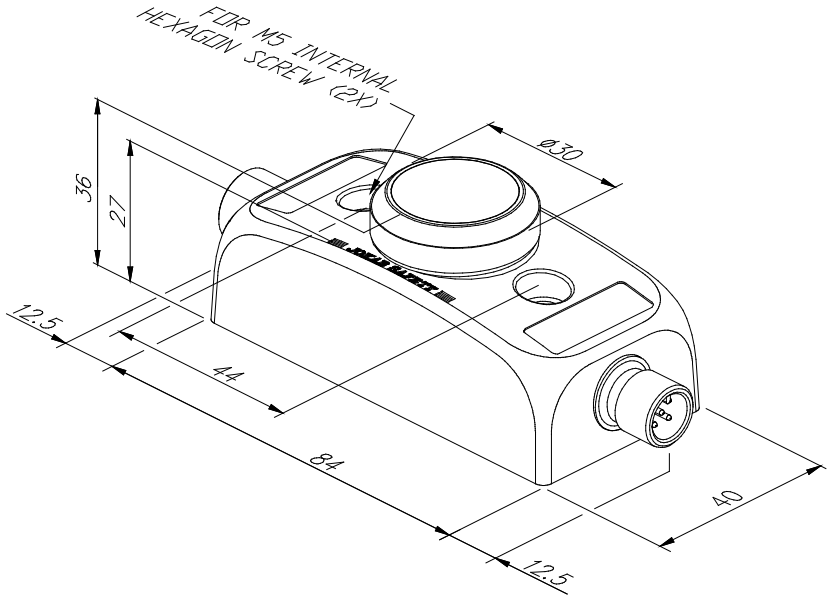

NB! All measurements in millimetres.

7 Technical data

Manufacturer	
Address	ABB JOKAB SAFETY Varlabergsvägen 11 SE-434 39 Kungsbacka Sweden
Power supply	
LED operating voltage	24 VDC (maximum 33 VDC)
LED power consumption	20 mA at 24 VDC 30 mA at 33 VDC
Push button box operating voltage	Min. 5 V Max. 35 V
Push button box power consumption	Min. 1 mA Max. 100 mA
Push button box nominal power	Max. 250 mW

General	
Enclosure class	IP65
Ambient temperature	-25…+50°C
Relative humidity	35 - 85 % (without icing or condensation)
Enclosure material	Polypropylene PP
Connector material	Au
Connections	Smile 11 RA/-B: M12 5-pin male connector Smile 12 RF: M12 5-pin male and female connector Smile 12 RG: M12 8-pin male and female connector
Size	84 x 40 x 36 (L x W x H) + 12 mm for M12 connector (L)
Weight	~ 60 g
Colour	Enclosure: yellow Push button: blue
Mechanical life	1,000,000 operations at 10 mA / 24 VDC
Switching reliability	10 x 10^{-6} at 5 mA / 24 VDC