

COUNTIS E1x

Active-energy meters

single phase - direct 63/80 A

new



count_253_a_1_cat

COUNTIS E14 - MID



count_216_a_1_cat

COUNTIS E12 - MID

Function

The **COUNTIS E1x** is a modular active electrical energy meter displaying the energy and power consumed (kWh and kW). It is designed for single-phase load metering and is used for direct connections of up to 63 or 80 A (depending on the model).

Common characteristics

- Measurement accuracy: 1%.
- Displayed on backlit screen.

Functional diagram

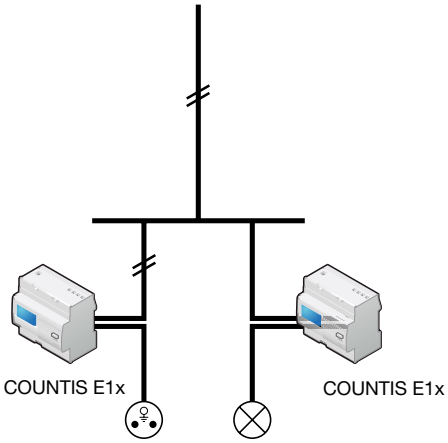

Advantages

RS485 (MODBUS), M-Bus communication, Ethernet or pulse outputs

To easily centralise your consumption, COUNTIS E1x devices have either one pulse output, one RS485 output (MODBUS), M-Bus or Ethernet Modbus TCP communication. With RS485 communication models, you can configure your meters remotely.

Multi-tariff

Lets you assign different time slots (every hour, dip times) or different sources (normal, back-up) to your energy readings to monitor your energy consumption in more detail.

MID certified B+D module

COUNTIS E units comply with the MID directive to guarantee accuracy and reliability when metering, compulsory for energy billing applications. “Module B+D” certification guarantees that the design and manufacturing process of products are approved by an accredited laboratory.

Models	Model-related specifications
E10	Pulse output
E11	Dual tariff (2 partial indices) + pulse output
E12	Dual tariff + pulse output + MID
E13	Dual tariff + pulse output + MODBUS RS485 communication
E14	Dual tariff + pulse output + MODBUS RS485 communication + MID
E15	Dual tariff + pulse output + M-BUS communication
E16	Dual tariff+ pulse output + M-BUS communication + MID
E17	Dual tariff + Ethernet
E18	Dual tariff + Ethernet + MID

The solution for

- Marinas
- Shopping centers
- Data centers



Strong points

- RS485 (MODBUS), M-Bus communication, Ethernet or pulse outputs
- Multi-tariff
- MID certified B+D module

MID certification

- COUNTIS E units comply with the MID directive to guarantee accuracy and reliability when metering, compulsory for energy billing applications.
- COUNTIS E MID feature tamper-proof components to prevent fraud.

Conformity to standards

- IEC 62053-21 class 1
- IEC 62053-31
- IEC 62052-11
- EN 50470-1
- EN 50470-3

socomec Innovative Power Solutions

Front panel

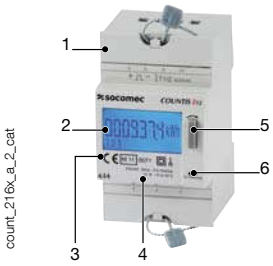

1. Terminal shrouds (COUNTIS E12/E14/E16/E18).
2. Backlit LCD display.
3. MID marking (COUNTIS E12/E14/E16/E18).
4. Serial number.
5. Navigation button.
6. Metrological LED (1000 pulses/kWh).

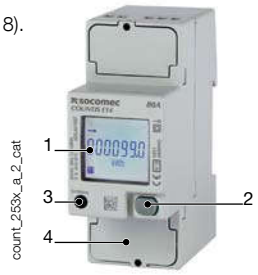

1. Backlit LCD display.
2. Navigation button.
3. Metrological LED (1000 pulses/kWh).
4. Voltage, current and neutral terminals.

Case

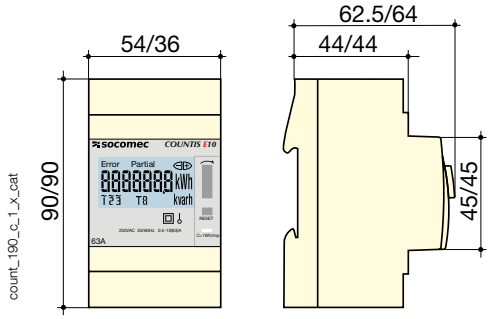

	COUNTIS E10 ... E12	COUNTIS E13 ... E18
Type	modular	modular
Number of modules	3	2
Dimensions W x H x D	54 x 90 x 62.5 mm	36 x 90 x 64 mm
Case degree of protection	IP 20	IP 20
Front degree of protection	IP 51	IP 51
Display type	backlit LCD	backlit LCD
Rigid cable cross-section	1.5 ... 16 mm^2	1.5 ... 35 mm^2
Flexible cable cross-section	1 ... 16 mm^2	1.5 ... 35 mm^2
Weight	170 g	215 g E13/14/17/18 205 g E15/16

Electrical characteristics

Measurement of currents	COUNTIS E10...E12	COUNTIS E13...E18
Type	single phase - direct 63 A	single phase - direct 80 A
Input consumption	max. 0.8 VA	max. 0.5 VA
Startup current (I_{st})	40 mA	20 mA
Minimum current (I_{min})	0.5 A(1).	0.25 A
Transition current (I_{tr})	1 A(2).	0.5 A
Reference current (I_{ref})	10 A(3).	5 A
Permanent overload (I_{max})	63 A	80 A
Intermittent overload	1890 A over 10 ms	30 I_{max} over 10 ms
Voltage measurement		
Range of measurement	230 V ± 20%	230 ... 240 V ± 20%
Consumption (VA)	Max. 0.5 VA	3.5 VA max E13/14/17/18 7.5 VA max E15/16
Permanent overload	280 V phase-neutral	290 V phase-neutral
Energy accuracy		
Active (according to IEC 62053-21)	Class 1	Class 1
Active (according to EN 50470)	Class B	Class B
Power supply		
Self-powered	Yes	
Frequency	50/60 Hz	

(1) $I_{(min)} \leq 0.5 * Itr$ (2) Guaranteed precision class of between $I_{(tr)}$ and $I_{(max)}$.
*(3) $I_{(ref)} = I_{(b)}$ (base current) = 10 * $I_{(tr)}$ for direct connection COUNTIS devices.*

Output (pulses)	COUNTIS E10 ... E12	COUNTIS E13 ... E16
Optocoupler type (IEC 62053-31)	Class A (20 ... 30 VDC)	27 VDC - 27 mA
Number	1	1
Fixed pulse weight	100 Wh	
Pulse duration	100 ms	50 ± 2 ms ON time 30 ± 2 ms min OFF time
Operating conditions	**COUNTIS E10 ... E12**	**COUNTIS E13 ... E18**
Operating temperature	-10 ... 55°C	-25 ... 55°C
Storage temperature	-20 ... 70°C	-25 ... 75°C
Relative humidity	85%	80%

Communication	COUNTIS E13/14	COUNTIS E15/E16	COUNTIS E17/E18
Link	RS485	Wired	RJ45
Type	2 half duplex 2-3 half duplex (E13/E14)		Full duplex
Protocol	MODBUS® RTU	M-BUS	MODBUS TCP, HTTP, NTP, DHCP
Baudrate	1200 ... 57600 bauds	300 ... 9600 bauds	10/100 Mbps

Connection

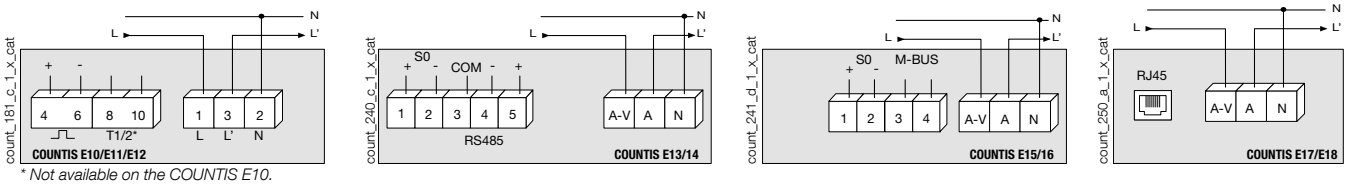

** Not available on the COUNTIS E10.*

References

Type	COUNTIS E10 Reference	COUNTIS E11 Reference	COUNTIS E12 Reference	COUNTIS E13 Reference	COUNTIS E14 Reference	COUNTIS E15 Reference	COUNTIS E16 Reference	COUNTIS E17 Reference	COUNTIS E18 Reference
Direct 63 A	4850 **3000**								
Direct 63 A - Dual tariff		4850 **3001**							
Direct 63 A - Dual tariff + MID			4850 **3002**						
Direct 80 A - Dual tariff + MODBUS communication via RS485				4850 **3043**					
Direct 80 A - Dual tariff + MODBUS communication via RS485 + MID					4850 **3044**				
Direct 80 A - Dual tariff + M-Bus communication						4850 **3045**			
Direct 80 A - Dual tariff + M-Bus communication + MID							4850 **3046**		
Direct 80 A - Dual tariff + Ethernet Modbus TCP communication								4850 **3047**	
Direct 80 A - Dual tariff + Ethernet Modbus TCP communication + MID									4850 **3048**