COMPACT DIN RAIL KIT



TECHNICAL DATA

Mounting standard	35 mm DIN Rail
Material	ABS + PC plastic
Weight	6.5 g
Screws included	Philips Pan Head screw #6-32×3/16, 2pcs
Dimensions	70 mm x 25 mm x 14,5 mm
RoHS Compliant	v

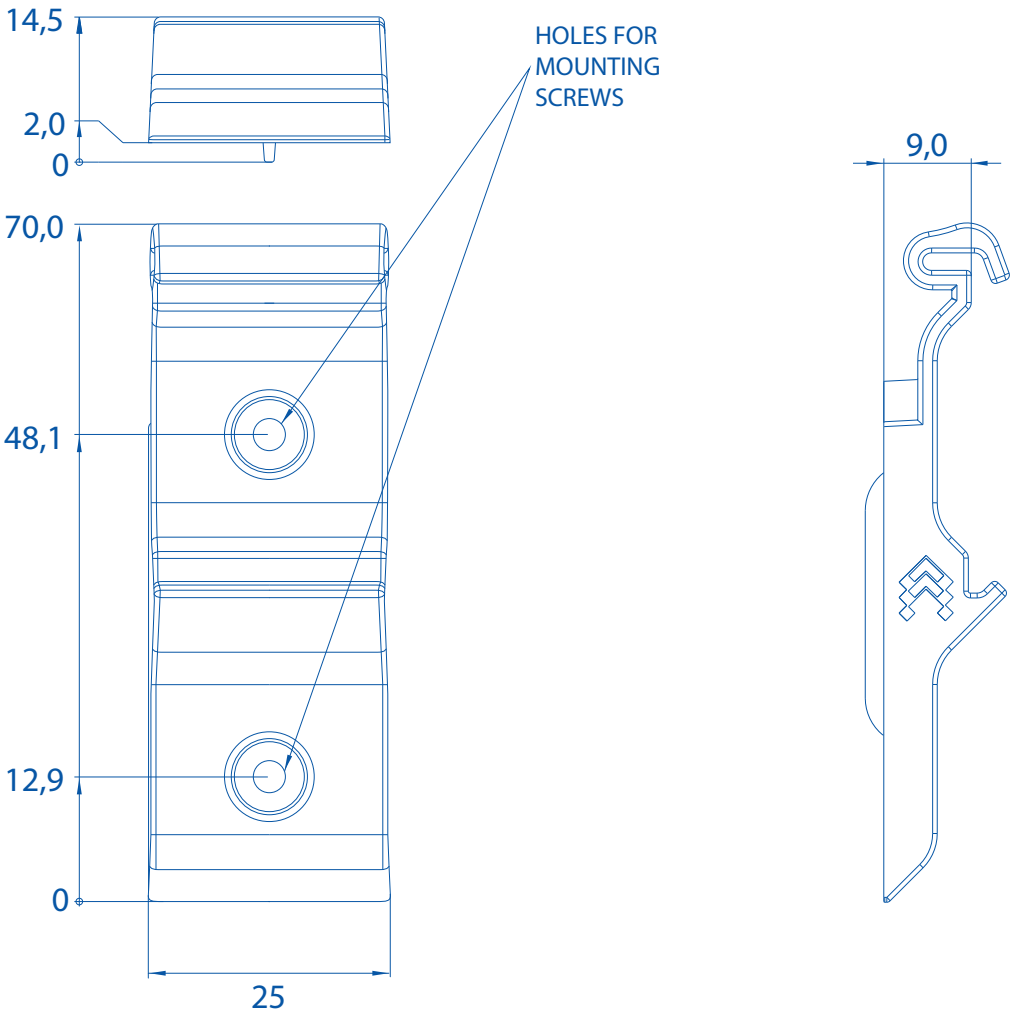

Copyright © 2022, TELTONIKA NETWORKS. Specifications and information given in this document are subject to change by TELTONIKA NETWORKS without prior notice.