128, av. du Maréchal-de-Lattre-de-Tassigny - 87045 LIMOGES Cedex
Tel.: 0 (+33) 5 55 06 87 87 - Fax: 0 (+33) 5 55 06 88 88
www.legrand.com

Mosaic™
LCS² Cat. 6 RJ 45 socket

Cat. No(s): 0 765 03/04/05/06/07/22/23/44/46/61/62/63/64
0 765 65/66/81/82/83/91/92/93/94/95
0 791 62/65 - 0 794 61/62/64/65/81/85/86/92

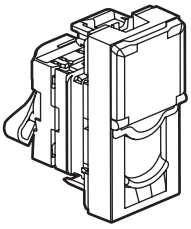

0 765 61

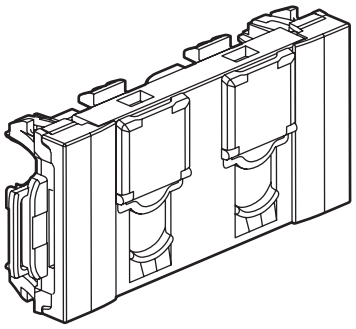

0 765 44

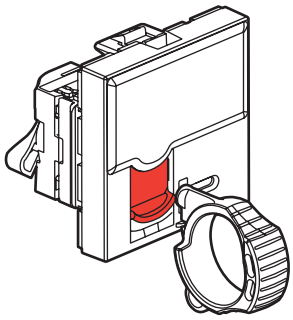

0 765 44

1. USE

Category 6 RJ 45 socket for high speed transmission (Gigabit Ethernet).
The mechanism can be flush-mounted or surface-mounted in 40 mm depth box min.
To be equipped with frame and plates.
Fixing with clips.
Sockets 0 765 81/82/83: This product is made of silver-ion based antimicrobial* material.
This technology eliminates bacteria, fungi and viruses without creating any immunisation or resistance effects (physical, rather than chemical, destruction).
Particularly suitable for healthcare establishments (hospitals, clinics, nursing homes, laboratories, waiting rooms, etc.) and more generally for areas subject to hygiene restrictions (industrial, shared and restaurant kitchens, waste, etc.).
This product offers an additional way of ensuring the non-proliferation of bacteria, fungi and viruses without interfering with cleaning protocols.

2. RANGE

	Description	White	Aluminium	White antimicrobial*	Anthracite	Black
UTP	Cat. 6 RJ 45 socket - 1 module	0 765 61	0 794 61	0 765 81	-	0 794 81
	Cat. 6 RJ 45 socket - 2 modules	0 765 64	0 794 64	-	-	-
	Cat. 6 RJ 45 socket with controlied access- 2 modules - with red shutter	0 765 94	-	-	-	-
	Cat. 6 RJ 45 socket inclined at 90° - 2 modules	0 765 91	-	-	-	-
	Cat. 6 RJ 45 socket inclined at 45° - 2 modules	0 765 03	-	-	-	-
	Cat. 6 2 x RJ 45 socket inclined at 45° - 4 modules	0 765 04	-	-	-	-
	Cat. 6 2 x RJ 45 socket - 4 modules	0 765 44	-	-	-	-
FTP	Cat. 6 RJ 45 socket - 1 module	0 765 62	0 794 62	0 765 82	0 791 62	-
	Cat. 6 RJ 45 socket - 2 modules	0 765 65	0 794 65	-	0 791 65	0 794 85
	Cat. 6 RJ 45 socket - 2 modules - with green shutter	0 765 22	-	-	-	-
	Cat. 6 RJ 45 socket - 2 modules - with orange shutter	0 765 23	-	-	-	-
	Cat. 6 RJ 45 socket inclined at 90° - 2 modules	0 765 92	0 794 92	-	-	-
	Cat. 6 RJ 45 socket inclined at 45° - 2 modules	0 765 05	-	-	-	-
	Cat. 6 RJ 45 socket with controlied access - 2 modules - with red shutter	0 765 95	-	-	-	-
	Cat. 6 2 x RJ 45 socket inclined at 45° - 4 modules	0 765 06	-	-	-	-
	Cat. 6 2 x RJ 45 socket - 4 modules	0 765 46	-	-	-	-
STP	Cat. 6 RJ 45 socket - 1 module	0 765 63	-	0 765 83	-	-
	Cat. 6 RJ 45 socket - 2 modules	0 765 66	-	-	-	0 794 86
	Cat. 6 RJ 45 socket inclined at 90° - 2 modules	0 765 93	-	-	-	-
	Cat. 6 RJ 45 socket inclined at 45° - 2 modules	0 765 07	-	-	-	-

3. DIMENSIONS (mm)

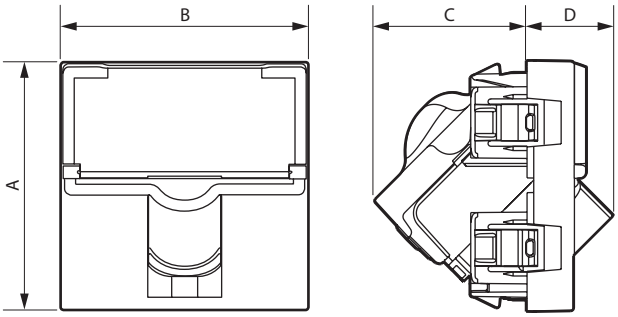

References	A	B	C	D
0 765 61/62/81/82 - 0 791 62 - 0 794 61/62/81	45	22.5	25.5	-
0 765 63/66/83/93 - 0 794 86	45	45	31	-
0 765 03/04/05/06/22/23/44/46 - 0 791 65	45	45	25.5	-
0 765 64/65/91/92/94/95 - 0 794 64/65/85/92	45	45	25.5	-
0 765 07	45	45	27.5	16

4. CONNECTION

Accepts the following cable connectors:
RJ 11 (4 contacts), RJ 12 (6 contacts), RJ 45 (9 contacts).

Double colour code EIA - TIA 568 A and B on terminals:
UTP 8 contacts
FTP 9 contacts
STP 9 contacts 360° screen

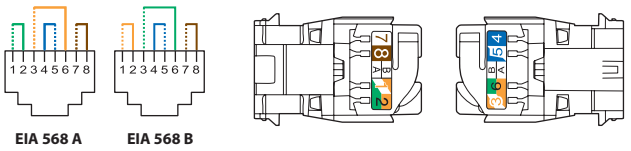

Conductors supported:
- Single-wire: 0.5 to 0.65 mm, AWG 22 to 25
- Multiple-wire: AWG 26
- Polyethylene conductor insulation: max. Ø with insulation 1.58 mm

RJ 45 connectors are equipped with a locking nut that does not require the use of a specific tool and which enables re-cabling in the event of error.

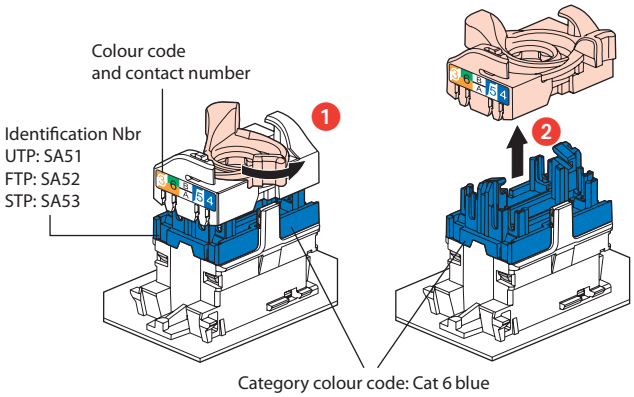

4. CONNECTION *(continued)*

This system allows the wire pairs to be spread easily before mounting them on the connector.

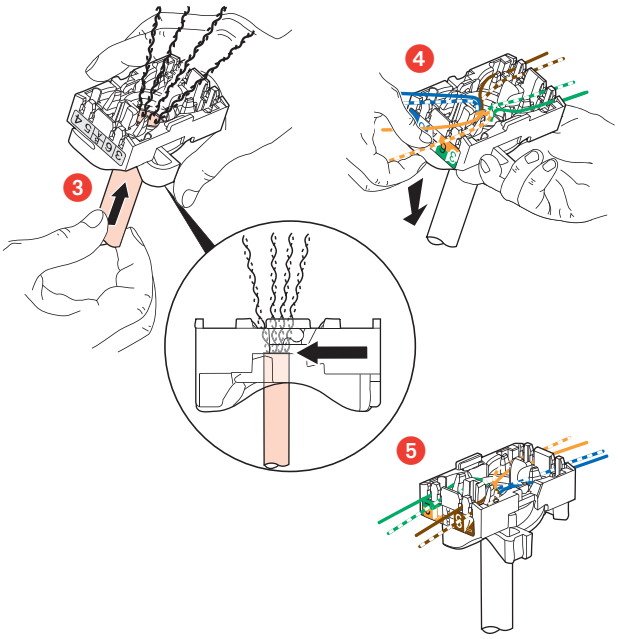

Spreading cables ensures that each pair is separated by the specified 13 mm.
Spreading pairs by 90° in relation to the cable ensures optimum performance.

5. FUNCTION

Operation 0 765 94/95

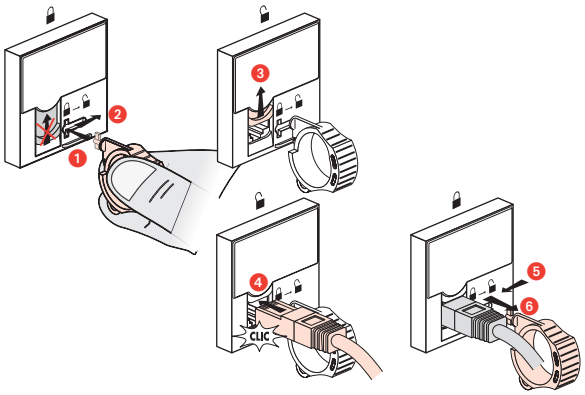

Installation

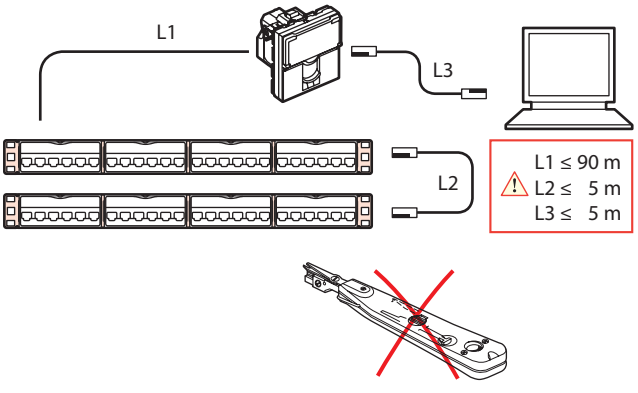

6. TECHNICAL CHARACTERISTICS

■ 6.1 Mechanical characteristics
Impact resistance: IK 03
Penetration against solid bodies and liquids: IP 20
Max. number of connections and disconnections: 5 without refreshing the wiring.
Endurance: 2500 movements (plug insertion/withdrawal).

■ 6.2 Material characteristics
Contacts: Gold/nickel, minimum thickness of gold > 0.8 µm
Metal parts: Bronze, nickel, platinum, gold
For STP products the body and the spreader are made of metal alloy with a copper-nickel coating.

Base: Polycarbonate
Cover plate: Polycarbonate
Polycarbonate with antimicrobial* treatment for Cat. Nos 0 765 81/82/83.

Halogen-free
UV resistant

Self-extinguishing:
+ 850° C / 30 s for insulating parts holding live parts in place
+ 650° C / 30 s for the other insulating part

■ 6.3 Electrical characteristics
Breakdown voltage ≥ 1000 V
Contact resistance ≤ 20 mΩ
Insulation resistance ≥ 500 mΩ at 100 Vdc

■ 6.4 Climatic characteristics
Storage temperature: - 10° C to + 70° C
Operating temperature: - 5° C to + 35° C

7. CLEANING

Clean the surface with a cloth.
Do not use acetone, tar-removing cleaning agents or trichloroethylene.

■ 7.1 Resistance to cleaning products
Resistant to the following products: hexane (NF C 61-314), methylated spirit, soapy water, diluted ammonia, bleach diluted to 10%, window-cleaning products, pre-impregnated wipes.

■ 7.2 Resistance to hospital grade cleaning products
Resistant to the following products: Anios, Surfanios, Bactilysine, diluted hydrogen peroxide (35%).

Caution: Always test before using other special cleaning products.

8. STANDARDS AND APPROVALS

Comply with installation and manufacturing standards.
See e-catalogue.

* Contains a silver compound to ontagonize the growth of bacteria on the surface.