Heavy duty hinges - 65 x 230 mm

Model : 52-1-3553



Riveted pin.

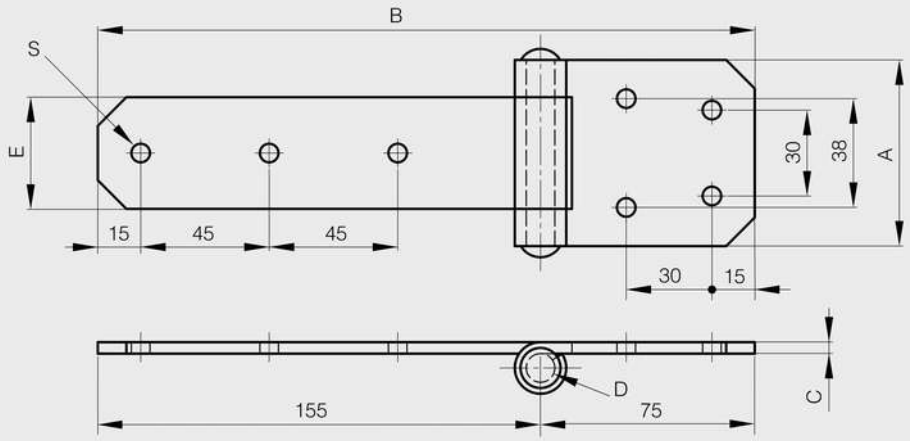

© PINET INDUSTRIE 2014

Material	304 stainless steel
Finish	polished
A (length)	65
D (pin diameter)	10
B (width)	230
C	4
E	39
Weight (g)	430
Opening angle	180
Note	drilled
S	6.5
Material	stainless steel
Functions	heavy duty

© PINET INDUSTRIE 2014