KI0207

Capacitive sensor

KI-2015-BBOA/NI/0,1/LS-100AK

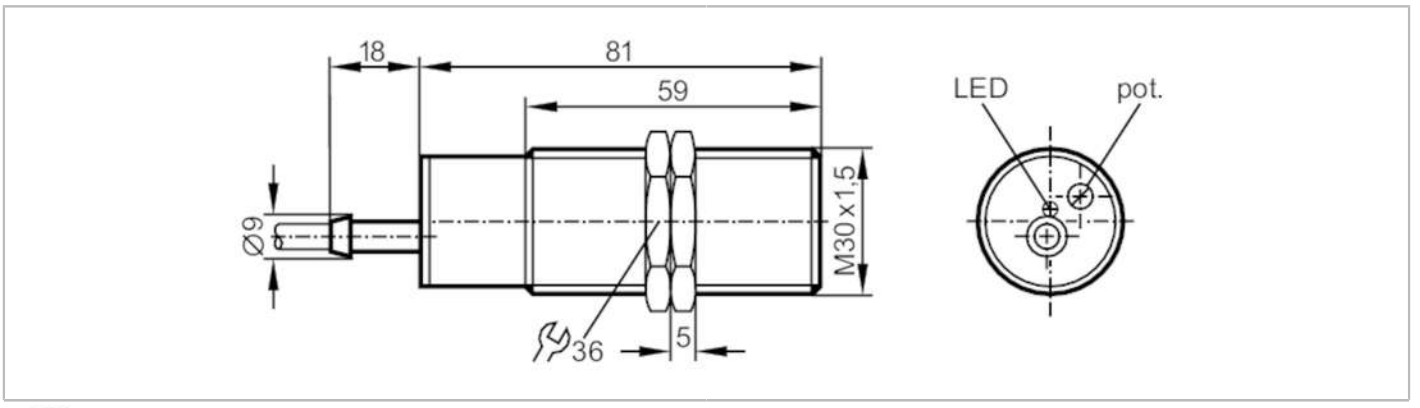

Product characteristics		
Output function		normally closed
Sensing range	[mm]	3...15
Housing		threaded type
Dimensions	[mm]	M30 x 1.5
Electrical data		
Operating voltage	[V]	20...250 AC/DC
Protection class		II
Reverse polarity protection		no
Outputs		
Output function		normally closed
Max. voltage drop switching output DC	[V]	8
Max. voltage drop switching output AC	[V]	10
Minimum load current	[mA]	5
Max. leakage current	[mA]	2.5 (250 V AC) / 1.7 (110 V AC) / 1.5 (24 V DC)
Permanent current rating of switching output AC	[mA]	200; (250 (...50 °C))
Permanent current rating of switching output DC	[mA]	200; (250 (...50 °C))
Short-time current rating of switching output	[mA]	1500; (20 ms / 0,5 Hz)
Switching frequency AC	[Hz]	25
Switching frequency DC	[Hz]	50
Short-circuit proof		no
Overload protection		no
Detection zone		
Sensing range	[mm]	3...15
Sensing range adjustable		yes
Factory setting sensing range	[mm]	15
Real sensing range Sr	[mm]	15 ± 10 %
Operating distance	[mm]	0...12.1

KI0207

Capacitive sensor

KI-2015-BBOA/NI/0,1/LS-100AK

Accuracy / deviations			
Correction factor		glass: 0.4 / water: 1 / ceramics: 0.2 / PVC: 0.2	
Hysteresis	[% of Sr]	1...15	
Switch point drift	[% of Sr]	-15...15	
Operating conditions			
Ambient temperature	[°C]	-25...70	
Protection		IP 65	
Increased immunity		yes; (increased immunity to conducted radio frequency interference)	
Tests / approvals			
EMC		EN 60947-5-2	
MTTF	[years]	302	
Mechanical data			
Weight	[g]	126.5	
Housing		threaded type	
Mounting		non-flush mountable	
Dimensions	[mm]	M30 x 1.5	
Thread designation		M30 x 1.5	
Materials		PBT	
Displays / operating elements			
Display		switching status	1 x LED, yellow
Electrical connection			
Required protection		miniature fuse to IEC60127-2 sheet 1; ≤ 2 A; fast acting	
Accessories			
Items supplied		lock nuts: 2	
Remarks			
Remarks		Recommendation: Check the safe functioning of the unit after a short circuit.	
Pack quantity		1 pcs.	

KI0207

Capacitive sensor

KI-2015-BBOA/NI/0,1/LS-100AK

Electrical connection - plug

Cable: 0.1 m, PVC; 2 x 0.5 mm²

Connector: 1 x 1/2"; coding: C



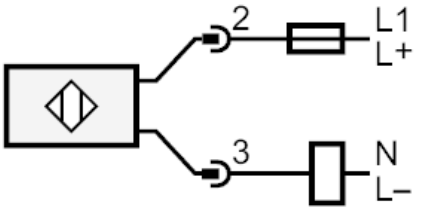

Note miniature fuse to IEC60127-2 sheet 1 ≤ 2 A fast acting