RoHS ✔

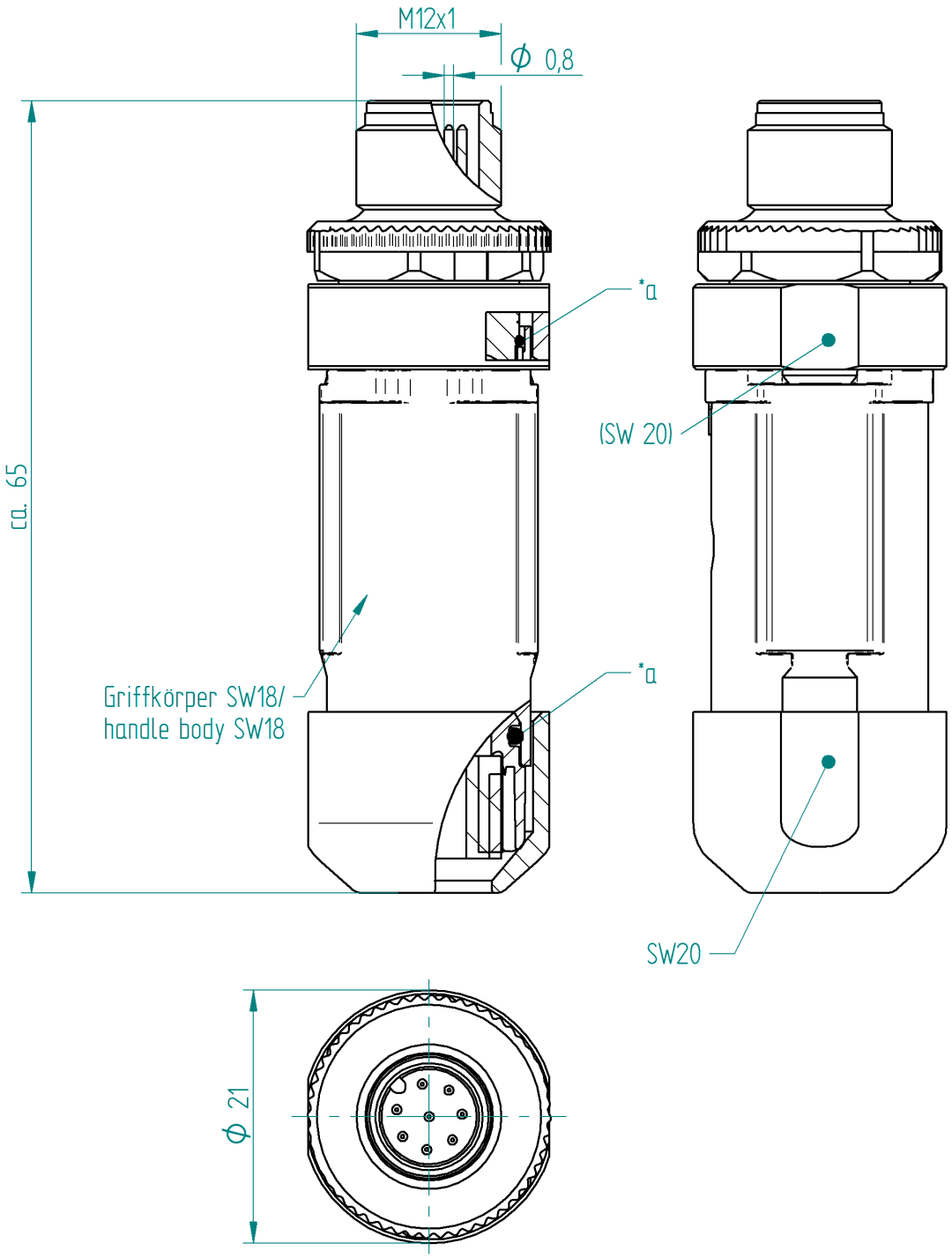

Typ/ type	Polzahl/ number of poles		Kabeldurchlass/ cable outlet
RSCS 8/9	8	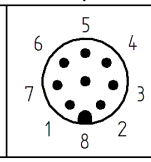	Ø 4 - 9 mm

The information/details in this datasheet merely contain general descriptions or performance factors which, when applied in an actual situation, do not always correspond with the described form, and may be amended by way of the further development of products. The desired performance factors shall only be binding if these are expressly agreed on conclusion of the contract.

DIN ISO 5456-2

Product description

Description	M12 male connector with threaded joint, field attachable and shielded
Type	RSCS 8/9
Order No	59922
Type of contacts	male, screw terminal
Number of contacts	8
Cable gland	Pg 9
Conductor size	max. 0,75 mm²
Standard	IEC 61076-2-101
Construction type	JM, A-coded

Technical data

Rated voltage	30 V
Rated current *	2 A
Rated impulse voltage	1 kVeff./ 60s
Pollution degree	3 acc. to DIN EN 60664-1 (VDE 0110-1)
Contact resistance	≤ 5 mΩ
Insulation resistance	> 10^9 Ω

* Notice derating

Materials

Contact bearer	PA, black
Housing	GD - ZnAl
Surface housing	Cu, Ni
Contact	CuZn
Contact plating	Cu/Au
Cable gland screw	CuZn, nickel-plated
Knurled screw	GD - ZnAl, pre-coppered and nickel-plated
Coupling nut	CuZn, nickel-plated
Shield contacting spring	CuBn, tin-plated
Gasket(s)	FKM
Insulating sleeve	PA, black
Clamp cage	PBT, black

Environmental conditions

Protection class (IEC 60529) *	IP67
Temperature range (connector)	-25°C to +90°C, notice Derating

Good chemical resistance.
The resistance has to be checked in individual cases.

* only if mounted and locked in combination with Hirschmann / Lumberg connector.

Notes

*a O-Ring

Do not connect or disconnect under load.

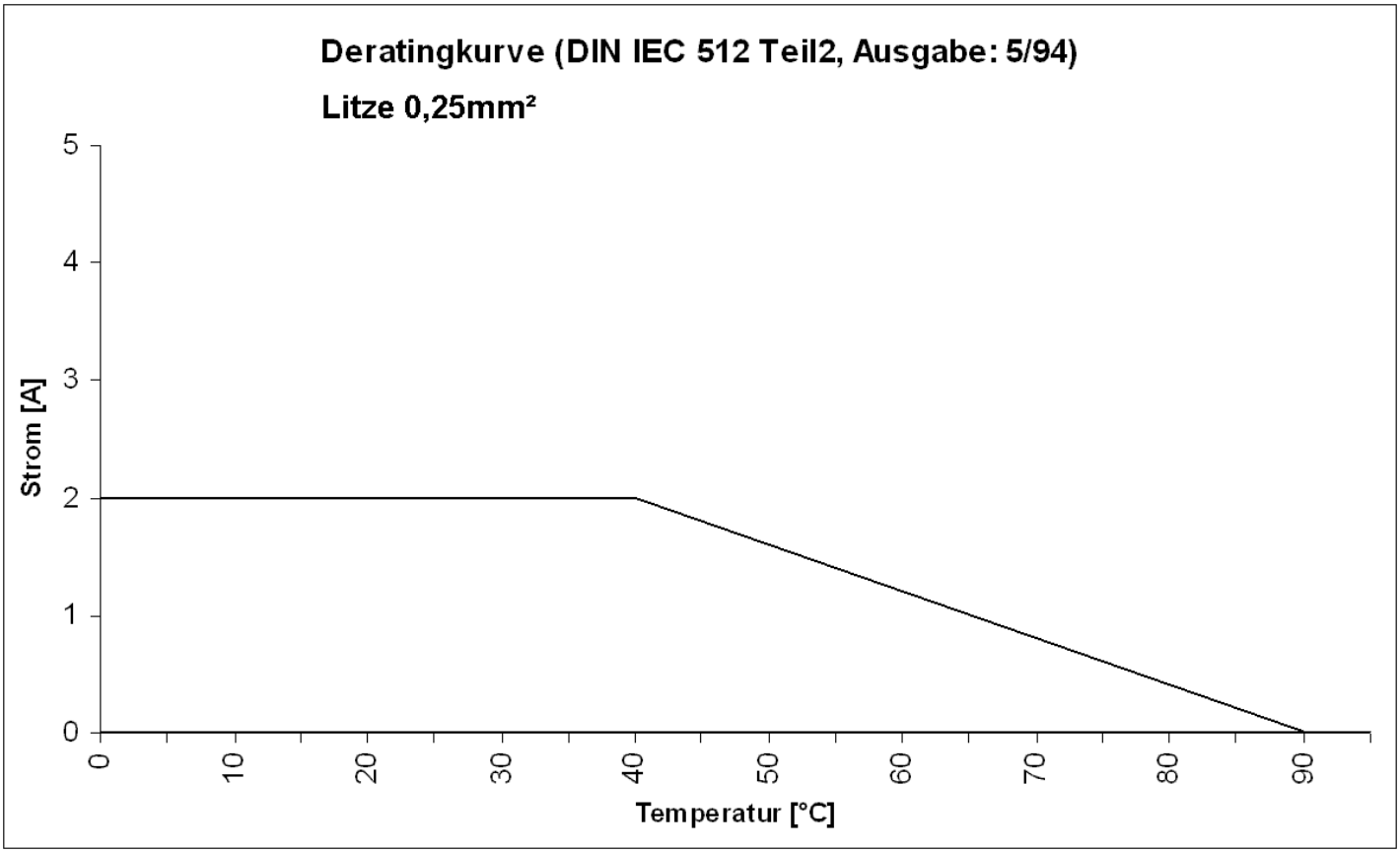

product overview

Article-No.	Type
000-059-922	RSCS 8/9