Capacitive Sensor

BCS M12BBI1-PSC40D-EP02
BCS00PU

BALLUFF
sensors worldwide

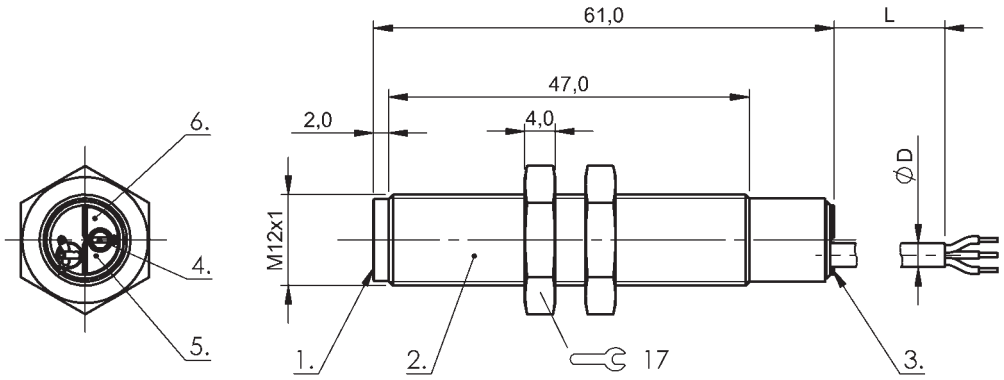

1) Active surface 2) Housing 3) Top cover 4) Pot 5) LED Power 6) LED function indicator

- **PNP**
- **Normally open (NO)**
- **4.00 mm**
- **Flush (shielded)**
- **Cable, PUR, 2.00 m**
- **switching distance adjustable**

IND. CONT. EQ. 81U2
for use in the secondary of a class 2 source of supply

IND. CONT. EQ. 81U2
for use in the secondary of a class 2 source of supply

General attributes	
Approvals / Conformity	cULus CE
Basic standard	IEC 60947-5-2
Enclosure Type per IEC 60529	IP67
Function indicator	Yes
Polarity reversal protected	Yes
Power indicator	Yes
Protection Class	II
Scope of delivery	2 nuts
Short circuit protected	Yes
Trademark	GLOBAL
Electrical attributes	
Connection type	Cable
Eff. operating current Ie	100 mA
Eff. operating voltage Ue DC	24.0 V
Electrical version	DC, direct current
Max. no-load cur. Io undamped	15.0 mA
No-load current Io damped max.	18.0 mA
Operating voltage UB max. DC [V]	30.0 V
Operating voltage UB min. DC [V]	10.0 V
Rated insulation voltage Ui	75 V DC
Ripple max. (% of Ue)	10 %
Sensitivity	switching distance adjustable
Switching freq. f max. (at Ue)	100 Hz
Switching function	Normally open (NO)
Switching output	PNP
Voltage drop static max.	1.5 V
Mechanical attributes	
Ambient temperature Ta max.	85 °C
Ambient temperature Ta min.	-25 °C
Cable diameter D max.	3.5 mm
Cable jacket material	PUR
Cable length L [m]	2.00 m
Conductor cross-section	0.14 mm²
Cover material	PA
Depth	61.0 mm
Diameter d1	M12x1.0
Housing material	PBT
Mech. installation condition	Flush (shielded)
Mounting length	47.0 mm
Number of conductors	3
Rated operating distance Sn [mm]	4.00 mm
Sensing face material	PBT
Storage temperature max.	+85 °C
Storage temperature min.	-25 °C
Tightening torque	1 Nm
Working range Sa max. [mm]	4.00 mm
Working range Sa min. [mm]	1.00 mm

