# finger guards:metal



**Description**

These finger guards are made from plated steel. The selection chart indicates the suitability of each finger guard for PAPST fans.

**Selection Chart**

Note: Shaded areas indicate a choice of finger guards for those fans.

**Note**

Although the guards are designed to meet safety requirements, the equipment manufacturer is responsible for ensuring that their use complies with relevant safety standards.

**Fan Size**

| Fan Series | 40 mm | 60 mm | 80 mm | 92 mm | 120 mm | 127 mm | 135 mm | 150 mm | 171 mm | 200 mm |
|---|---|---|---|---|---|---|---|---|---|---|
| 400 | LZ29-1 | | | | | | | | | |
| 600 | | LZ28-1 | | | | | | | | |
| 2200 | | | | | | | | | | LZ21 |
| 3300 | | | | LZ23 | | | | | | |
| 3400 | | | | | | | | | | |
| 3600 | | | | LZ23-1 | | | | | | |
| 3800 | | | | LZ23K | | | | | | |
| 3900 | | | | | | | | | | |
| 4100 | | | | | LZ30 | | | | | |
| 4200 | | | | | | | | | | |
| 4300 | | | | | LZ30-4 | | | | | |
| 4400 | | | | | | | | | | |
| 4500 | | | | | LZ30K | | | | | |
| 4600 | | | | | LZ30GB | | | | | |
| 4800 | | | | | | | | | | |
| 5100 | | | | | | | LZ25 | | | |
| 5200 | | | | | | LZ35 | | | | |
| 5600 | | | | | | | LZ25 | | | |
| 5900 | | | | | | LZ35 | | | | |
| 6000 | | | | | | | | | LZ26K | |
| 6200 | | | | | | | | | LZ26K | |
| 6400 | | | | | | | | | LZ37 | |
| 7000 | | | | | | | | LZ24 | | |
| 7100 | | | | | | | | | | |
| 7200 | | | | | | | | LZ27 | | |
| 7400 | | | | | | | | | | |
| 7800 | | | | | | | | LZ27K | | |
| 8300 | | | LZ22N | | | | | | | |
| 8400 | | | | | | | | | | |
| 8500 | | | LZ32-4 | | | | | | | |
| 8800 | | | LZ22K | | | | | | | |
| 9900 | | | | | AS 4000 | | | | | |

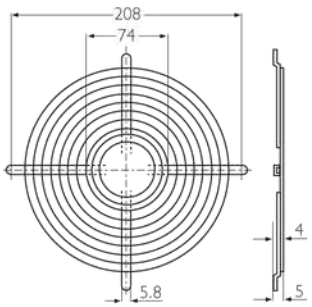


**LZ21** Rust resistant steel wire.
2xxx series fans

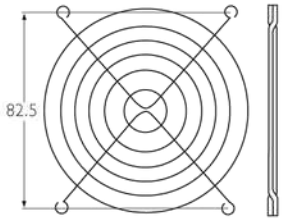


**LZ23K** Welded steel guard, bright zinc.
3xxx series fans

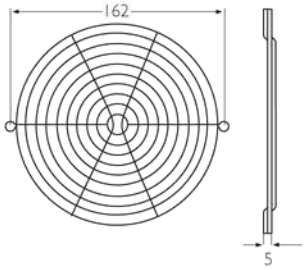


**LZ26K** Welded steel guard, chromium.
6xxx series fans

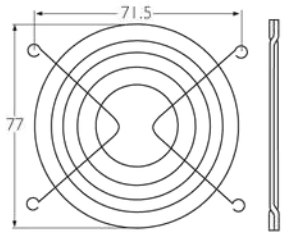


**LZ22K** Welded steel guard, bright nickel.
8xxx series fans

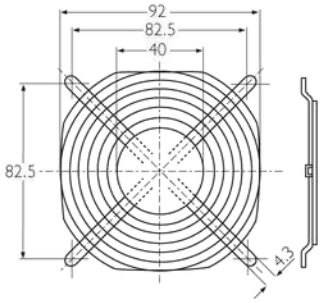


**LZ23-1** Rust resistant steel wire.
3xxx series fans

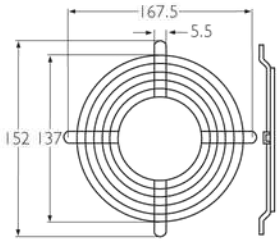


**LZ27** Welded steel guard, bright zinc.
7xxx series fans

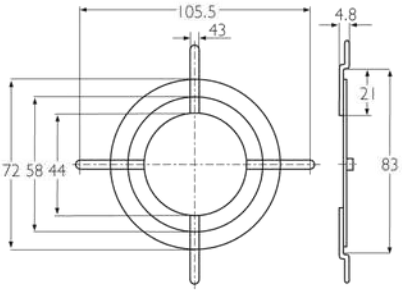


**LZ22N** Welded steel guard, bright zinc.
8xxx series fans

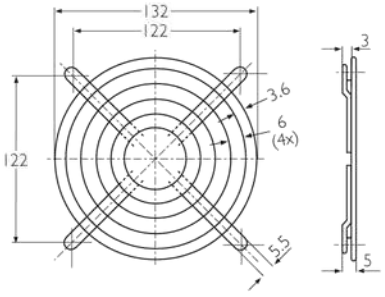


**LZ25** Rust resistant steel wire.
5xxx series fans

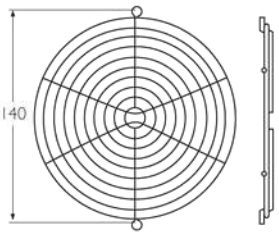


**LZ27K** Welded steel guard, bright zinc.
7xxx series fans

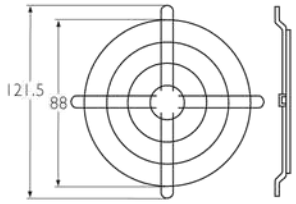


**LZ23** Welded steel guard, bright zinc.
3xxx series fans

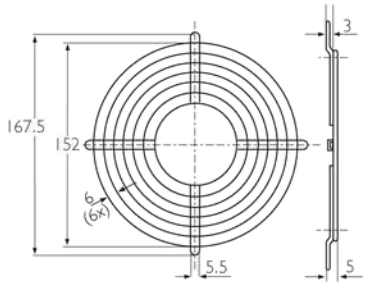


**LZ26** Welded steel guard, bright zinc.
6xxx series fans

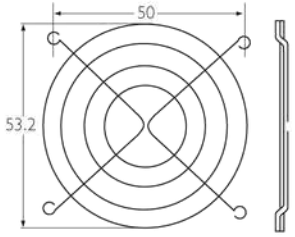


**LZ28CP** Welded steel guard, chromium.
6xx series fans

All measurements in mm.

# finger guards:metal

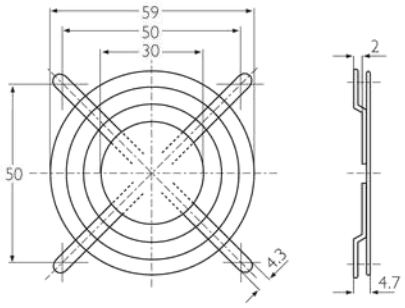


**LZ28-1** Rust resistant steel wire.
6xx series fans

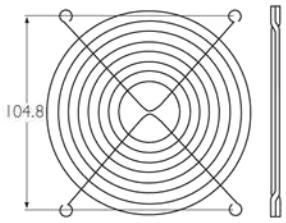


**LZ30K** Welded steel guard, bright nickel.
4xxx and 9xxx series fans

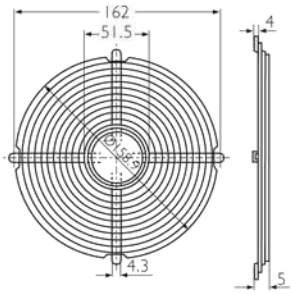


**LZ37** Rust resistant steel wire.
6xxx series fans

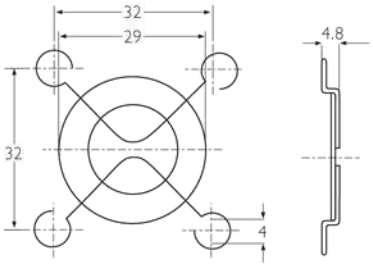


**LZ29-1** Rust resistant steel wire.
4xxx series fans

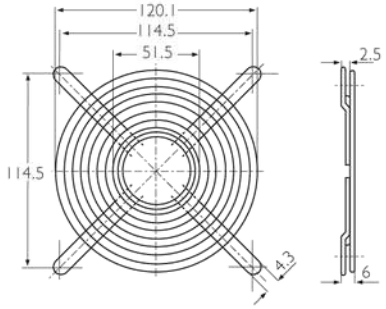


**LZ35** Rust resistant steel wire.
5xxx series fans

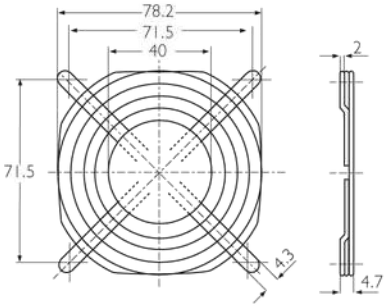


**LZ32-4** Rust resistant steel wire.
8xxx series fans

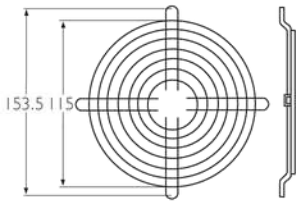


**LZ30** Welded steel guard, chromium.
4xxx and 9xxx series fans

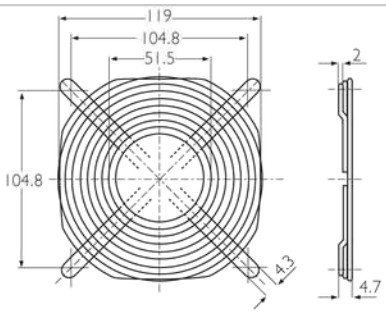


**LZ30-4** Rust resistant steel wire.
4xxx and 9xxx series fans

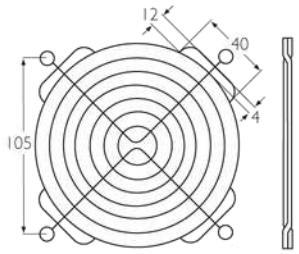


**LZ30GB** Welded steel guard, chromium.
4xxx and 9xxx series fans

All measurements in mm.