Part Number: BU-26130-*
Description: Ultra Tech Test Prod
2607

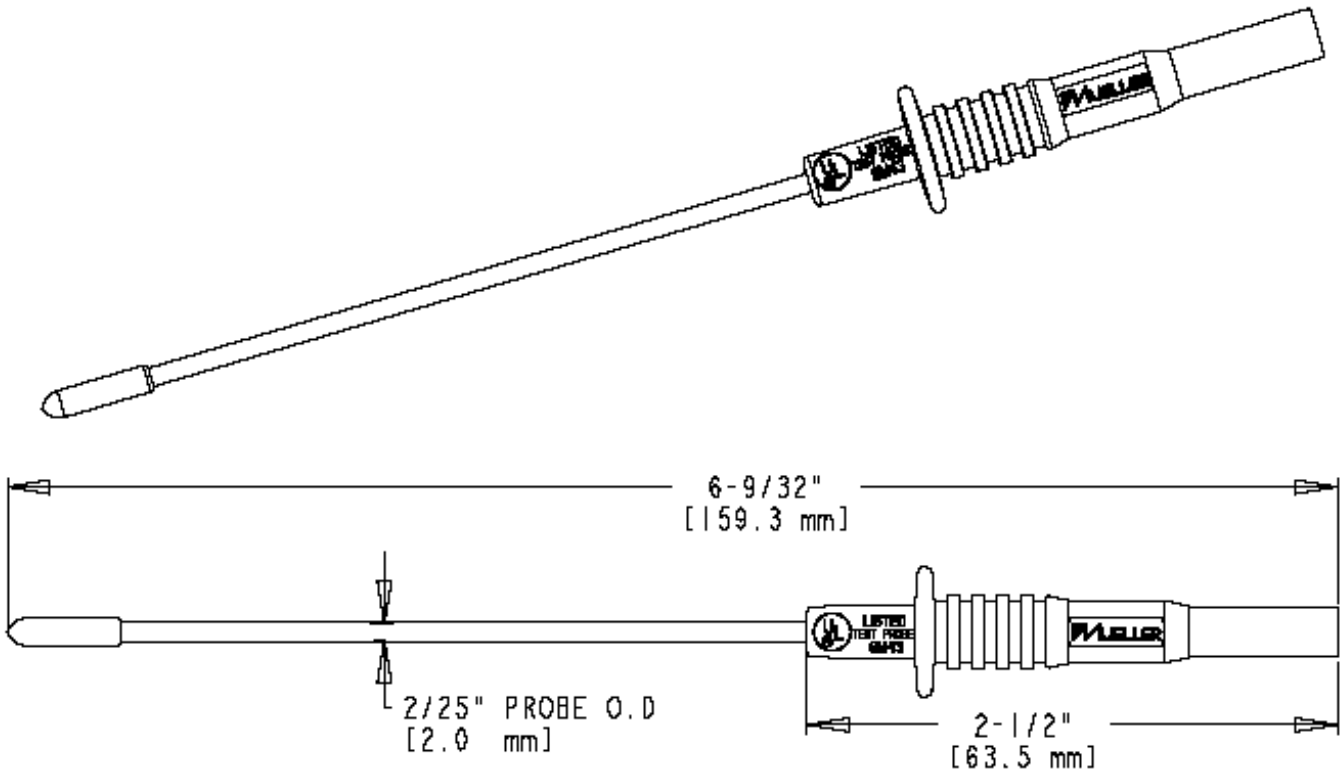

- **Ultra Tech Test Prod;**
- **Compatible with all shrouded, unshrouded, or retractable 0.16” (4mm) banana plugs**
- **Length: 6.27” (159.3 mm)**
- ***Std. Colors: -0 Black -2 Red**
- **Material: Housing: Nylon; Contact: Nickel-plated brass**
- **Rating: 1000 Volts, 20 Amps, IEC 1010 Compliant**
- **RoHS Compliant**

Mueller Electric Company
1625 E. 31st Street
Cleveland, Ohio 44114

ISO 9001:2000
Over 95 Years Of Innovation
www.muellerelectric.com

TEL. 800-955-2629
TEL. 216-771-5225
FAX. 216-771-3068