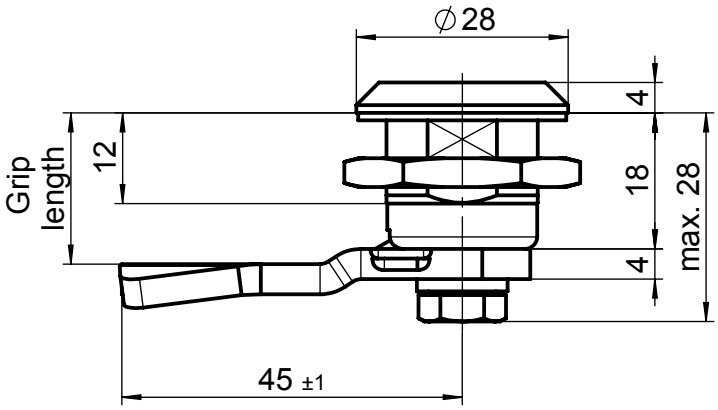

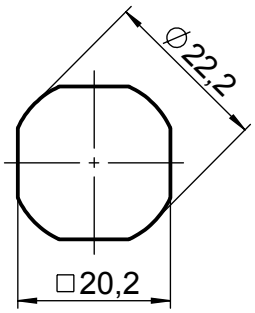

cut out

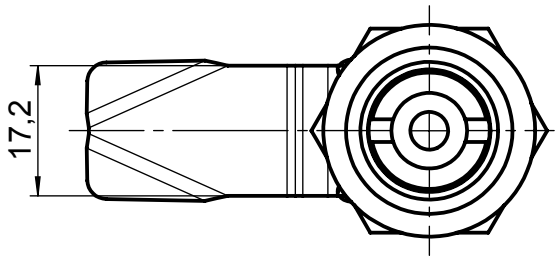

Art. No.	Grip length
341-0185	13mm
341-0191	20mm
341-0214	26mm
341-0220	32mm