WATERPROOF DOUBLE-POLE ROCKER SWITCH

KD Series

Features

- Enclosed switch complying to IP56
- Lighted and non-lighted versions
- Snap-in mounting
- Mechanical life: 100,000 cycles
- DC electrical life: 25,000 cycles

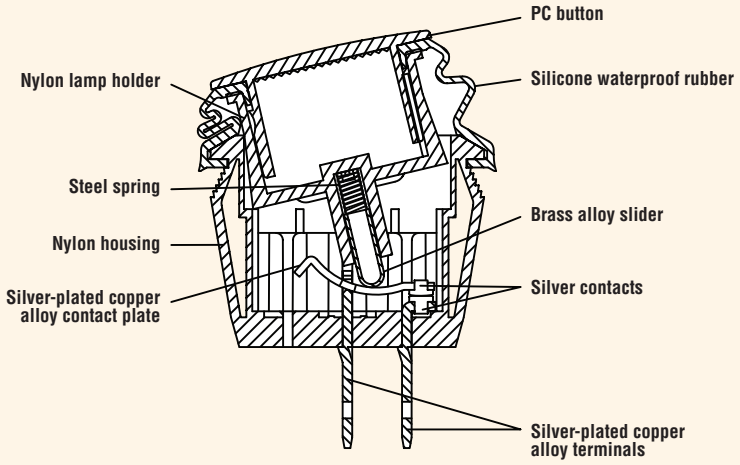

Electrical Ratings

Switch Series	VDC	UL1054 Rating	Electrical Life at Rated Load According to UL (Min. Operations)
KD	20A 14VDC; 10A 28VDC	16A 125VAC; 10A 250VAC	6,000



Specifications

Electrical

Dielectric Strength:	1500VAC for 1 minute
Insulation Resistance:	10^8 ohms min at 500VDC
Initial Contact Resistance:	0.050 ohms max
Temperature Rating:	-25°C to +85°C

Materials

Actuator:	Polycarbonate 94V-2
Housing:	Nylon 66 94V-2
Spring:	Steel
Contacts:	Silver Alloy
Movable Arm:	Silver-plated Copper Alloy
Terminals:	Silver-plated Copper Alloy
Waterproof Rubber:	Silicone

Dimensions inches (mm)

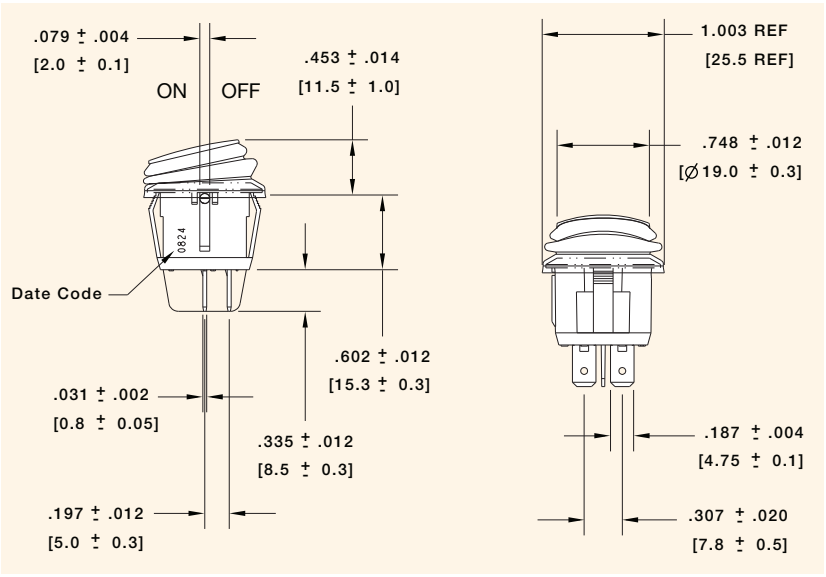

Panel Cut-Out Dimensions for Panel Thickness inches (mm)

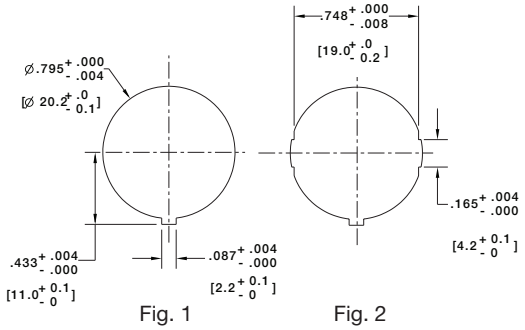

Fig. 1 Fig. 2

Mounting Holes	
Fig.	Panel Thickness
1	.059 to .098 (1.5 to 2.5)
2	.028 to .098 (0.7 to 2.5)

Examples of Common Part Numbers and Descriptions inches (mm)

Part Number	Circuitry	Switch Function	Terminal Type	Actuator/ Housing Color	Legend Marking
KDH3ANA1BBB		On – Off	0.187 (4.75) Quick Connect	Black/Black	
KDH3ALA2RBB		On – Off (Illuminated)	0.187 (4.75) Quick Connect	Red/Black (Red Lens)	
KDH3BNA1BBB		On – On	0.187 (4.75) Quick Connect	Black/Black	
KDH3CNA1BBB		On – Off –On	0.187 (4.75) Quick Connect	Black/Black	

Ordering Information

KD H 3 A N A 1 B B B

Series

Code	Contact Rating
H	16A 125VAC (UL) 10A 250VAC (UL) 20A 14VDC 10A 28VDC

Code	Circuitry
3	Double-Pole

Code	Switch Function
A	On – Off
B	On – On
C	On – Off – On

Code	Non-Lighted/Lighted
N	Non-Lighted
L	110V Neon Bulb
E	220V Neon Bulb

Code	Terminal Type
A	0.187 (4.75) Quick Connect

Code	Actuator Type
1	Non-Lighted
2	Lighted

Code	Actuator Color
A	Amber
B	Black
G	Green
L	Blue
R	Red

Code	Housing Color
B	Black

Code	Actuator Marking
B	Blank
C	•
D	O –
E	O I
F	I II
G	– =
J	ON OFF
N	I O II
P	– O =

Specifications subject to change without notice.

©2009 Cherry Corporation