Keysight U1241B and U1242B Handheld Digital Multimeters

User's and Service Guide

KEYSIGHT TECHNOLOGIES

Notices

Copyright Notice

© Keysight Technologies 2009 - 2019

No part of this manual may be reproduced in any form or by any means (including electronic storage and retrieval or translation into a foreign language) without prior agreement and written consent from Keysight Technologies as governed by United States and international copyright laws.

Manual Part Number

U1241-90063

Edition

Edition 22, August 5, 2019

Printed in:

Printed in Malaysia

Published by:

Keysight Technologies
Bayan Lepas Free Industrial Zone,
11900 Penang, Malaysia

Technology Licenses

The hardware and/or software described in this document are furnished under a license and may be used or copied only in accordance with the terms of such license.

Declaration of Conformity

Declarations of Conformity for this product and for other Keysight products may be downloaded from the Web. Go to http://www.keysight.com/go/conformity. You can then search by product number to find the latest Declaration of Conformity.

U.S. Government Rights

The Software is “commercial computer software,” as defined by Federal Acquisition Regulation (“FAR”) 2.101. Pursuant to FAR 12.212 and 27.405-3 and Department of Defense FAR Supplement (“DFARS”) 227.7202, the U.S. government acquires commercial computer software under the same terms by which the software is customarily provided to the public. Accordingly, Keysight provides the Software to U.S. government customers under its standard commercial license, which is embodied in its End User License Agreement (EULA), a copy of which can be found at http://www.keysight.com/find/sweula. The license set forth in the EULA represents the exclusive authority by which the U.S. government may use, modify, distribute, or disclose the Software. The EULA and the license set forth therein, does not require or permit, among other things, that Keysight: (1) Furnish technical information related to commercial computer software or commercial computer software documentation that is not customarily provided to the public; or (2) Relinquish to, or otherwise provide, the government rights in excess of these rights customarily provided to the public to use, modify, reproduce, release, perform, display, or disclose commercial computer software or commercial computer software documentation. No additional government requirements beyond those set forth in the EULA shall apply, except to the extent that those terms, rights, or licenses are explicitly required from all providers of commercial computer software pursuant to the FAR and the DFARS and are set forth specifically in writing elsewhere in the EULA. Keysight shall be under no obligation to update, revise or otherwise modify the Software. With respect to any technical data as defined by FAR 2.101, pursuant to FAR 12.211 and 27.404.2 and DFARS 227.7102, the U.S. government acquires no greater than Limited Rights as defined in FAR 27.401 or DFAR 227.7103-5 (c), as applicable in any technical data.

Warranty

THE MATERIAL CONTAINED IN THIS DOCUMENT IS PROVIDED “AS IS,” AND IS SUBJECT TO BEING CHANGED, WITHOUT NOTICE, IN FUTURE EDITIONS. FURTHER, TO THE MAXIMUM EXTENT PERMITTED BY APPLICABLE LAW, KEYSIGHT DISCLAIMS ALL WARRANTIES, EITHER EXPRESS OR IMPLIED, WITH REGARD TO THIS MANUAL AND ANY INFORMATION CONTAINED HEREIN, INCLUDING BUT NOT LIMITED TO THE IMPLIED WARRANTIES OF MERCHANTABILITY AND FITNESS FOR A PARTICULAR PURPOSE. KEYSIGHT SHALL NOT BE LIABLE FOR ERRORS OR FOR INCIDENTAL OR CONSEQUENTIAL DAMAGES IN CONNECTION WITH THE FURNISHING, USE, OR PERFORMANCE OF THIS DOCUMENT OR OF ANY INFORMATION CONTAINED HEREIN. SHOULD KEYSIGHT AND THE USER HAVE A SEPARATE WRITTEN AGREEMENT WITH WARRANTY TERMS COVERING THE MATERIAL IN THIS DOCUMENT THAT CONFLICT WITH THESE TERMS, THE WARRANTY TERMS IN THE SEPARATE AGREEMENT SHALL CONTROL.

Safety Information

CAUTION

A CAUTION notice denotes a hazard. It calls attention to an operating procedure, practice, or the like that, if not correctly performed or adhered to, could result in damage to the product or loss of important data. Do not proceed beyond a CAUTION notice until the indicated conditions are fully understood and met.

WARNING

A WARNING notice denotes a hazard. It calls attention to an operating procedure, practice, or the like that, if not correctly performed or adhered to, could result in personal injury or death. Do not proceed beyond a WARNING notice until the indicated conditions are fully understood and met.

Safety Symbols

The following symbols on the instrument and in the documentation indicate precautions that must be taken to maintain safe operation of the instrument.

	Direct current (DC)		Caution, risk of electric shock
	Alternating current (AC)		Caution, risk of danger (refer to this manual for specific Warning or Caution information)
	Both direct and alternating current	**CAT III 1000 V**	Category III 1000 V Overvoltage Protection
	Earth (ground) terminal	**CAT IV 600 V**	Category IV 600 V Overvoltage Protection
	Equipment protected throughout by double insulation or reinforced insulation		

General Safety Information

The following general safety precautions must be observed during all phases of operation, service and repair of this instrument. Failure to comply with these precautions or with specific warnings elsewhere in this manual violates safety standards of design, manufacture and intended use of the instrument. Keysight Technologies assumes no liability for the customer's failure to comply with these requirements.

WARNING

- Do not exceed any of the measurement limits defined in the specifications to avoid instrument damage and the risk of electric shock.
- Observe all markings on the instrument before connecting any wiring to the instrument.
- When working above 60 VDC, 30 VAC RMS or 42 V peak, exercise caution – such range pose a shock hazard.
- Do not measure more than the rated voltage (as marked on the multimeter) between terminals, or between terminal and earth ground.
- Double-check the multimeter's operation by measuring a known voltage.
- For current measurement, turn off circuit power before connecting the multimeter to the circuit. Always place the multimeter in series with the circuit.
- When connecting probes, always connect the common test probe first. When disconnecting probes, always disconnect the live test probe first.
- Detach test probes from the multimeter before you open the battery cover.
- Do not use the multimeter with the battery cover or part of the cover removed or loose.
- Replace the battery as soon as the low battery indicator  flashes on screen. This is to avoid false readings, which may lead to possible electric shock or personal injury.
- Do not operate the product in an explosive atmosphere or in the presence of flammable gases or fumes.
- Inspect the case for cracks or missing plastic. Pay extra attention to the insulation surrounding the connectors. Do not use the multimeter if it is damaged.

WARNING

- Inspect the test probes for damaged insulation or exposed metal, and check for continuity. Do not use the test probe if it is damaged.
- Do not use repaired fuses or short-circuited fuse-holders. For continued protection against fire, replace the line fuses only with fuses of the same voltage and current rating and recommended type.
- Do not service or perform adjustments alone. Under certain conditions, hazardous voltages may exist, even with the equipment switched off. To avoid dangerous electric shock, service personnel must not attempt internal service or adjustment unless another person, capable of rendering resuscitation or first aid, is present.
- Do not substitute parts or modify equipment to avoid the danger of introducing additional hazards. Return the product to Keysight Technologies Sales and Service Office for service and repair to ensure the safety features are maintained
- Do not operate damaged equipment as the safety protection features built into this product may have been impaired, either through physical damage, excessive moisture, or any other reason. Remove power and do not use the product until safe operation can be verified by service-trained personnel. If necessary, return the product to Keysight Technologies Sales and Service Office for service and repair to ensure the safety features are maintained.

CAUTION

- Turn off circuit power and discharge all high-voltage capacitors in the circuit before you perform resistance, continuity, diodes, or capacitance tests.
- Use the correct terminals, function, and range for your measurements.
- Never measure voltage when current measurement is selected.
- Ensure proper insertion of battery in the multimeter, and follow the correct polarity.
- You are advised to use low leakage batteries when changing to new batteries. Please remember to remove the batteries when the multimeter is not in use for a long period of time. Warning on the risk of battery leakage.

Measurement Category

The U1241B and U1242B have a safety rating of CAT III, 1000 V; and CAT IV, 600 V.

O Other circuits that are not directly connected to the mains.

Measurement CAT II Measurements performed on circuits directly connected to a low-voltage installation. Examples are measurements on household appliances, portable tools, and similar equipment.

Measurement CAT III Measurements performed in the building installation. Examples are measurements on distribution boards, circuit- breakers, wiring, including cables, bus-bars, junction boxes, switches, socket outlets in the fixed installation, and equipment for industrial use, and some other equipment including stationary motors with permanent connection to the fixed installation.

Measurement CAT IV Measurements performed at the source of the low-voltage installation. Examples are electricity meters and measurements on primary overcurrent protection devices and ripple control units.

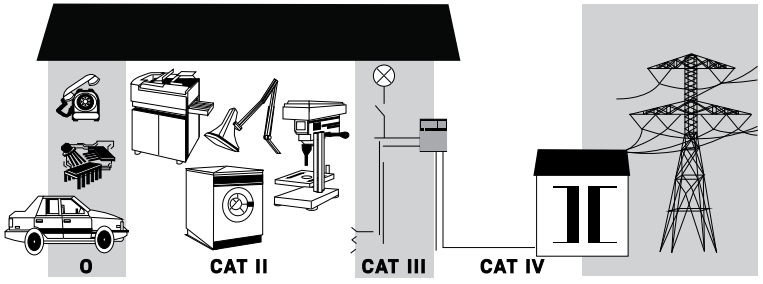

Environment Conditions

This instrument is designed for indoor use, in areas with low condensation and to be used with standard or compatible test probes.

Environment Conditions	Requirements
Operating environment	Full accuracy at –10 °C to 55 °C
Operating relative humidity	Full accuracy up to 80% RH for temperature up to 30 °C, decreasing linearly to 50% RH at 55 °C
Storage environment	–20 °C to 70 °C
Altitude	0 to 2000 meters per IEC 61010-1 (3rd Edition) CAT III, 1000 V / CAT IV, 600 V
Pollution Degree	Pollution Degree II

Regulatory Information

The Keysight U1241B and U1242B comply with the following Electromagnetic Compatibility (EMC) and safety compliances:

EMC Compliance

- IEC 61326-1:2012/EN 61326-1:2013
- CISPR 11:2009/EN55011:2009
- CANADA: ICES/NMB-001: Issue 4, June 2006
- Australia/New Zealand: AS/NZS CISPR 11:2011

Safety Compliance

- IEC 61010-1:2010/EN 61010-1:2010
- USA: ANSI/UL Std. No. 61010-1:2012,
  ANSI/UL Std. No. 61010-2-030 (1st Edition)
  (Reference Standard: UL Std. No. 61010-2-033 (1st Edition)
- Canada: CAN/CSA-C22.2 No.61010-1-12,
  CAN/CSA-C22.2 No. 61010-2-030-12
  (Reference Standard: CAN/CSA-C22.2 No. 61010-2-033-12)

Regulatory Markings

CE	The CE mark is a registered trademark of the European Community. This CE mark shows that the product complies with all the relevant European Legal Directives.	C SA US	The CSA mark is a registered trademark of the Canadian Standards Association.
CE ICES/NMB-001 ISM GRP 1-A	ICES/NMB-001 indicates that this ISM device complies with the Canadian ICES-001. Cet appareil ISM est conforme a la norme NMB-001 du Canada.		The RCM mark is a registered trademark of the Australian Communications and Media Authority.
	This instrument complies with the WEEE Directive (2002/96/EC) marking requirement. This affixed product label indicates that you must not discard this electrical or electronic product in domestic household waste.		This symbol indicates the time period during which no hazardous or toxic substance elements are expected to leak or deteriorate during normal use. Forty years is the expected useful life of the product.
	This symbol is a South Korean Class A EMC Declaration. This is a Class A instrument suitable for professional use and in electromagnetic environment outside of the home.		

Waste Electrical and Electronic Equipment (WEEE) Directive 2002/96/EC

This instrument complies with the WEEE Directive (2002/96/EC) marking requirement. This affixed product label indicates that you must not discard this electrical or electronic product in domestic household waste.

Product category

With reference to the equipment types in the WEEE directive Annex 1, this instrument is classified as a “Monitoring and Control Instrument” product.

The affixed product label is as shown below.



Do not dispose in domestic household waste.

To return this unwanted instrument, contact your nearest Keysight Service Center, or visit http://about.keysight.com/en/companyinfo/environment/takeback.shtml for more information.

Sales and Technical Support

To contact Keysight for sales and technical support, refer to the support links on the following Keysight websites:

- www.keysight.com/find/handhelddmm
  (product-specific information and support, software and documentation updates)
- www.keysight.com/find/assist
  (worldwide contact information for repair and service)

In This Guide...

1 Getting Started Chapter 1 introduces key features and steps to get started with a U1241B or U1242B handheld digital multimeter. This chapter also guides you through the basics of the front panel operations.

2 Features and Functions Chapter 2 contains the information on how to set up connections to perform multimeter measurements. It also describes the features and functions that are available in the U1241B and U1242B handheld digital multimeters in step-by-step instructions.

3 Default Setting Configurations Chapter 3 describes on how to change and configure the default setting of the U1241B and U1242B handheld digital multimeters including data logging and other setting features

4 Service and Maintenance Chapter 4 provides the information on the warranty, services, maintenance procedures and troubleshooting hints to solve general problems that you may encounter with the multimeter.

5 Performance Tests and Calibration Chapter 5 contains the procedures of the performance verification tests and calibration adjustments.

6 Characteristics and Specifications Chapter 6 lists the specifications and characteristics of the U1241B and U1242B handheld digital multimeters.

THIS PAGE HAS BEEN INTENTIONALLY LEFT BLANK.

Table of Contents

Safety Symbols 3
General Safety Information 4
Measurement Category 6
Environment Conditions 7
Regulatory Information 8
EMC Compliance 8
Safety Compliance 8
Regulatory Markings 9
Waste Electrical and Electronic Equipment (WEEE) Directive 2002/96/EC 10
Product category 10
Sales and Technical Support 10
In This Guide... 11

1 Getting Started

Introduction 22
Checking the Shipping Contents 23
The Front Panel at a Glance 24
Adjusting Tilt Stand 24
The Annunciator at a Glance 25
Analog Bar Graph 26
The Keypad and Rotary Switch at a Glance 26
The Input Terminal at a Glance 28

2 Features and Functions

Measuring Voltage 30
Measuring Current (> 440 mA) 30
Measuring Current (< 440 mA) 31

Measuring % Scale of 4 – 20 mA 31
Measuring Frequency 32
Measuring Resistance and Testing Continuity 32
Testing Diodes 33
Measuring Capacitance 34
Measuring Temperature 34
Measuring Harmonic Ratio (U1242B) 36
Using Switch Counter 36
MinMax Recording 38
Data Hold (Trigger Hold) 39
Refresh Hold 39
Null (Relative) 40
Data Logging (U1242B) 40
Manual Logging 41
Interval Logging 42
Reviewing Logged Data 43
Removing Logged Data 43
Scanning Temperature Measurement (U1242B) 44
Checking Battery Capacity 44
Alerts and Warning During Measurement 45
Overload Alert 45
Input-A Warning Alert 45
Input-mA Warning Alert 45

3 Default Setting Configurations

Setting Configurations 48

4 Service and Maintenance

General Maintenance 52
Battery Replacement 52
Fuse Replacement 54
Troubleshooting 55
Returning Instrument for Service 57

5 Performance Tests and Calibration

Calibration Overview 60
Closed-case Electronic Calibration 60
Calibration Interval 60
Adjustment is Recommended 61
Recommended Test Equipment 62
Basic Operating Test 63
Backlight Test 63
Testing the Display 63
Input-A Terminal Test 64
Input-mA Terminal Alert Test 64
Calibration Process 64
Test Considerations 65
Input Connections 66
Performance Verification Tests 66
Calibration Security 71
Unsecuring the Multimeter for Calibration 71
Using the Front Panel for Adjustments 73
Adjustment Considerations 74
Valid Adjustment Input Values 75
Calibration Adjustments 76
Exiting Adjustment Mode 81
Calibration Count 82
Calibration Errors 82

6 Characteristics and Specifications

THIS PAGE HAS BEEN INTENTIONALLY LEFT BLANK.

List of Figures

Figure 1-1 Front panel of a U1241B and U1242B handheld digital multimeters 24
Figure 1-2 Tilt stand positions 24
Figure 1-3 Annunciator display of a U1242B handheld digital multimeter 25
Figure 1-4 Keypad and rotary switch of a U1242B handheld digital multimeter 26
Figure 1-5 Input terminal of a U1242B handheld digital multimeter 28
Figure 2-1 Manual logging display 42
Figure 2-2 Interval logging display 43
Figure 2-3 Battery capacity display 44
Figure 4-1 Battery replacement 53
Figure 4-2 Fuse 1 replacement 54
Figure 4-3 Fuse 2 replacement 55
Figure 5-1 Annunciator display 63

THIS PAGE HAS BEEN INTENTIONALLY LEFT BLANK.

List of Tables

Table 1-1 List of standard items and optional accessories 23
Table 1-2 Descriptions of each annunciator 25
Table 1-3 Bar graph counts 26
Table 1-4 Keypad descriptions and functions 27
Table 1-5 Features that can be accessed through front panel keypad 27
Table 1-6 Terminal connections for different measuring functions 28
Table 2-1 Annunciator display for each switch condition 37
Table 2-2 Functions available for data logging 41
Table 3-1 Available setting options in Setup mode 49
Table 4-1 Basic troubleshooting hints 56
Table 4-2 List of replacement part numbers 56
Table 5-1 Recommended test equipment 62
Table 5-2 Verification Tests 67
Table 5-3 Valid adjustment input values 75
Table 5-4 Calibration Adjustments 77
Table 5-5 Calibration error codes 83

THIS PAGE HAS BEEN INTENTIONALLY LEFT BLANK.

1 Getting Started

Introduction 22
Checking the Shipping Contents 23
The Front Panel at a Glance 24
Adjusting Tilt Stand 24
The Annunciator at a Glance 25
The Keypad and Rotary Switch at a Glance 26
The Input Terminal at a Glance 28

This chapter introduces key features and steps to get started with a U1241B or U1242B handheld digital multimeter. This chapter also guides you through the basics of the front panel operations.

Introduction

The handheld digital multimeters' key features are:

- DC, AC voltage and current measurements.
- True-RMS measurement for both AC voltage and current
- Harmonic ratio for power quality of sine wave (for U1242B)
- Switch counter for detecting the bounce of switch
- Ambient temperature display with each measurement
- Scan temperature measurement for T1, T2 and T1–T2 (for U1242B)
- Resistance measurement up to 100 MΩ
- Diode and audible continuity tests
- Capacitance measurement up to 10mF
- The % scale readout for 4–20 mA or 0–20 mA measurement
- Temperature test with selectable 0 °C compensation (without ambient temperature compensation).
- K-type (for U1241B) and J/K-types temperature measurement (for U1242B)
- MinMax Recording for minimum, maximum and average readings
- Data Hold with manual or auto trigger
- Null/Relative function
- Auto or manual data logging memories (for U1242B)
- Battery capacity indicator
- Adjustable brightness level of orange LED backlight display
- Closed case calibration
- 10,000 count precision true RMS digital multimeter, designed to meet EN/IEC 61010-1:2010 Category III 1000 V / Category IV 600 V Overvoltage Protection, Pollution Degree II standards

Checking the Shipping Contents

Verify that you have received the following items for the standard shipped items or optional accessories that you may have ordered. If any of the above item missing, or any mechanical damage and defect on the multimeter, notify your nearest Keysight Technologies Sales Office.

Table 1-1 List of standard items and optional accessories

Type	Model ID	Items
Standard		U1241B or U1242B handheld digital multimeter
		Four 1.5 V AAA alkaline batteries
		Silicone test leads
		4 mm probes
		Quick Start Guide
		Certificate of Calibration
Optional	U1162A	Alligator clips
	U1163A	SMT Grabbers
	U1164A	Fine tip test probe
	U1181A	Immersion probe type-K
	U1182A	Industrial surface probe
	U1183A	Air probe
	U1184A	Temperature probe adapter
	U1185A	Thermocouple (J-type) probe and adapter
	U1186A	Thermocouple (K-type) probe and adapter
	U1583B	AC current clamp
	U1165A	Test probe leads
	U1168A	Standard test lead set with 4 mm test probes
	U1169A	Standard test leads with 4 mm probe tip
	U1171A	Magnetic hanging kit
	U1172A	Transit case for handheld DMM, aluminium-clad
	U1174A	Soft carrying case

The Front Panel at a Glance

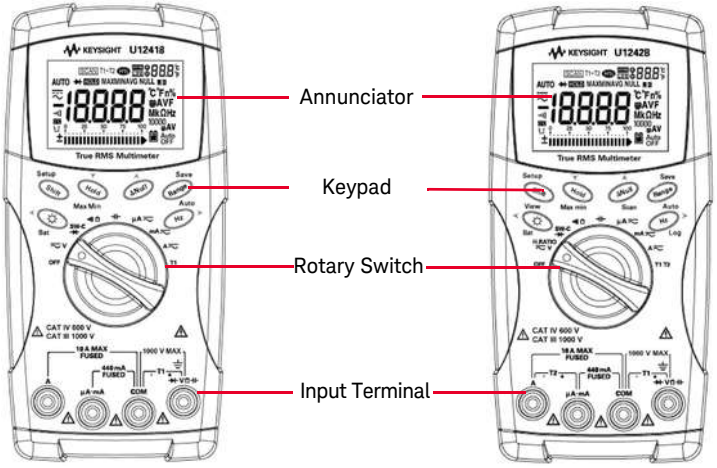

Figure 1-1 Front panel of a U1241B and U1242B handheld digital multimeters

Adjusting Tilt Stand

Tilt stand at 60°



Pull the tilt stand outwards to its maximum reach (approximately 60°)

Tilt stand at 30°

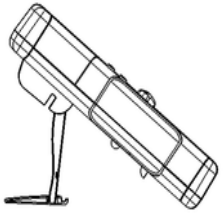

Bend the tip of the stand

Figure 1-2 Tilt stand positions

The Annunciator at a Glance

To view the full display, press and hold Hold while turning the rotary switch from OFF to any non-OFF position. Press any key to resume normal functionality mode.

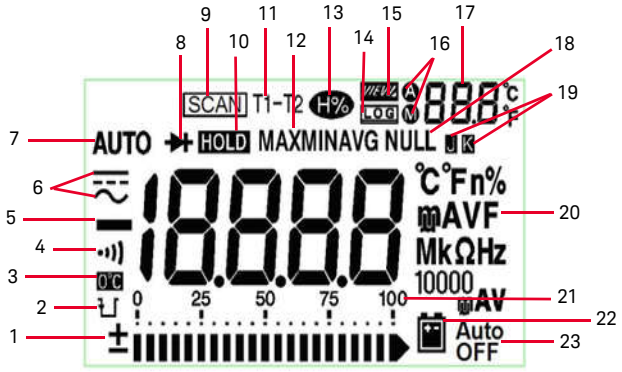

Figure 1-3 Annunciator display of a U1242B handheld digital multimeter

Table 1-2 Descriptions of each annunciator

No.	Descriptions	No.	Descriptions
1	21-segment analog bar graph display	12	MinMax Recording mode
2	Capacitor discharge indicator	13	Harmonic Ratio mode (for U1242B)
3	Cold junction of ambient temperature disabled	14	Data logging mode (for U1242B)
4	Audible continuity for resistance and diode function	15	Data logging View mode (for U1242B)
5	Primary display –18.8.8.8	16	Auto or manual for data logging mode and datalog viewing mode
6	AC or DC measurement mode	17	Secondary display (temperature display)
7	Auto range	18	Null math function
8	Diode / Audible continuity	19	Thermocouple type for temperature measurement
9	T1, T2 and T1 – T2 temperature measurements scan (for U1242B)	20	Primary measurement units
		21	Measurement range
10	Data hold	22	Low battery indicator
11	T1, T2* or T1 – T2* temperature measurements	23	Auto power off indicator

*T2 temperature measurement and delta (T1 – T2) are only available for U1242B.

Analog Bar Graph

When frequency is indicated on the primary display during voltage or current measurement, the bar graph represents the voltage or current value. When 4–20 mA% scale or 0–20 mA% scale is indicated on the primary display, the bar graph represents the current value. Each segment represents 500 or 50 counts depending on the range indicated on the peak bar graph.

Table 1-3 Bar graph counts

Range	Counts / Segment	Function
	50	Diode
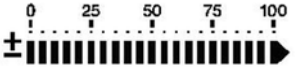	500	V, A, Ω, ⊣⊢

The Keypad and Rotary Switch at a Glance

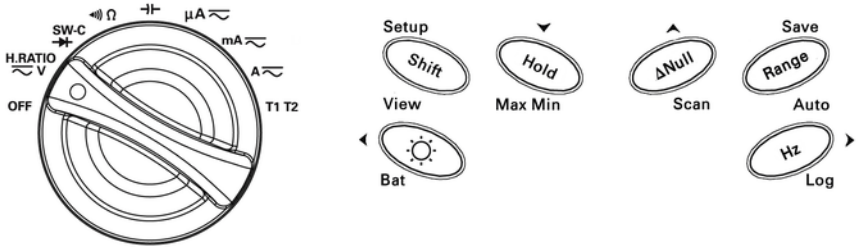

Figure 1-4 Keypad and rotary switch of a U1242B handheld digital multimeter

Table 1-4 Keypad descriptions and functions

Function	First level functions	Range	Second level functions (press Shift)	Range
OFF	Turn off the multimeter			
H.RATIO ≂V	DCV measurement	0.1 mV to 1000 V	ACV measurement	50 mV to 1000 V
			Harmonic ratio (for U1242B only)	0.0% to 99.9%
SW-C ⊣▸	Diode measurement		Switch counter measurement	
◂)) Ω	Resistance measurement	0.1 Ω to 100 MΩ	Audible continuity measurement	
⊣⊢	Capacitance measurement	0.1 nF to 10 mF		
μA ≂	DCμA	0.1 μA to 10 mA	ACμA measurement	50 μA to 10 mA
mA ≂	DCmA	0.01 mA to 440 mA	ACmA measurement	5 mA to 440 mA
			mA% scale	
A ≂	DCA	0.001 A to 10 A	ACA measurement	0.5 A to 10 A
T1	T1 temperature	–40 °C to 1000 °C	T2 and T1–T2 temperature measurements (for U1242B)	–40 °C to 1000 °C

Table 1-5 Features that can be accessed through front panel keypad

Actions	Steps
Turns ON backlight	Press ☼
Checks battery capacity	Press and hold ☼ for > 1 second
Freezes the measured value	Press Hold
Starts MIN/MAX/AVG recording	Press and hold Hold for > 1 second
Offsets the measured value	Press ΔNull
Scans the measured temperature (for U1242B only)	Press and hold ΔNull for > 1 second
Changes the measuring range	Press Range
Turns on auto range	Press and hold Range for > 1 second
Measures frequency for AC signal	Press Hz
Starts manual data logging	Press and hold Hz for > 1 second

NOTE Please use manual ranging to measure AC signal with a DC offset.

The Input Terminal at a Glance

WARNING To avoid damaging this device, do not exceed the input limit.

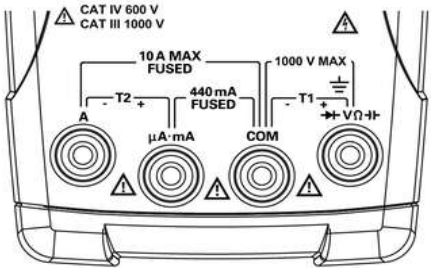

Figure 1-5 Input terminal of a U1242B handheld digital multimeter

Table 1-6 Terminal connections for different measuring functions

Measurement Functions	Input terminal		Overload Protection
Voltage	VΩ	COM	1000 V R.M.S.
Diode	VΩ	COM	1000 V R.M.S < 0.3 A short circuit current
Resistance	VΩ	COM	1000 V R.M.S < 0.3 A short circuit current
Capacitance	VΩ	COM	1000 V R.M.S < 0.3 A short circuit current
µA & mA	**µA mA**	**COM**	440 mA/1000 V 30 kA/ fast-acting fuse
A	**A**	**COM**	11 A/1000 V 30 kA/ fast-acting fuse
Temperature	**+T1**	**–T1**	1000 V R.M.S.
Temperature (for U1242B only)	**+T2**	**–T2**	440 mA/1000 V 30 kA/ fast-acting fuse

2 Features and Functions

Measuring Voltage 30
Measuring Current (> 440 mA) 30
Measuring Current (< 440 mA) 31
Measuring % Scale of 4 – 20 mA 31
Measuring Frequency 32
Measuring Resistance and Testing Continuity 32
Testing Diodes 33
Measuring Capacitance 34
Measuring Temperature 34
Measuring Harmonic Ratio (U1242B) 36
Using Switch Counter 36
MinMax Recording 38
Data Hold (Trigger Hold) 39
Refresh Hold 39
Null (Relative) 40
Data Logging (U1242B) 40
Scanning Temperature Measurement (U1242B) 44
Checking Battery Capacity 44
Alerts and Warning During Measurement 45

This chapter contains the detailed information on how to configure connections to perform the multimeter measurements using the U1241B and U1242B handheld digital multimeters. It builds on information already provided in the Quick Start Guide.

Measuring Voltage

WARNING Ensure that terminal connections are correct for that particular measurement before any measurement. To avoid damaging the device, do not exceed the input limit.

Measuring DC Voltage

Measuring AC Voltage

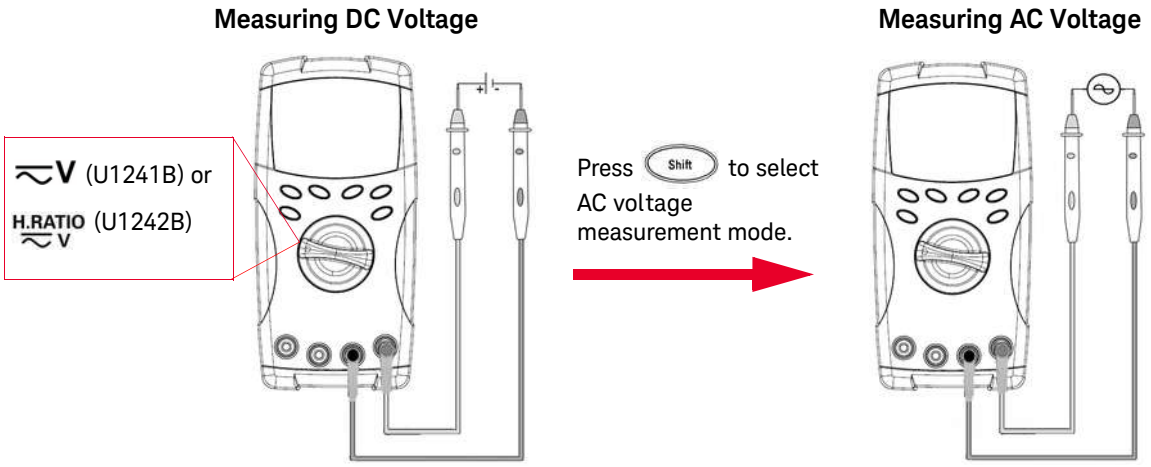

Measuring Current (> 440 mA)

Measuring DC current

Measuring AC current

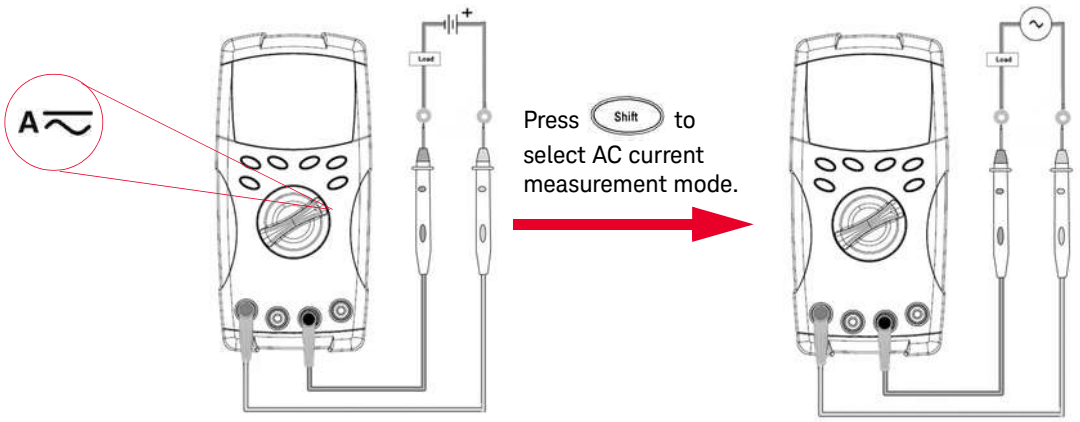

Measuring Current (< 440 mA)

NOTE If the measured value is lower than 440 mA, use the mA or µA current measurement mode.

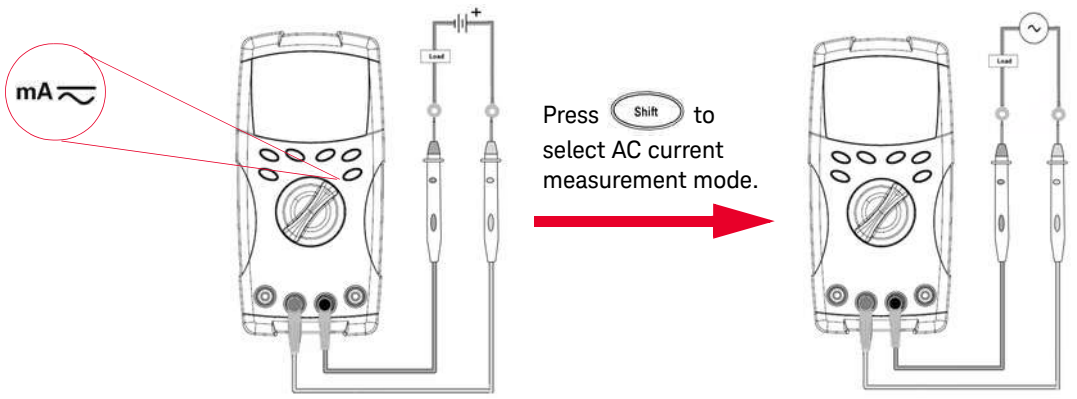

Measuring % Scale of 4 – 20 mA

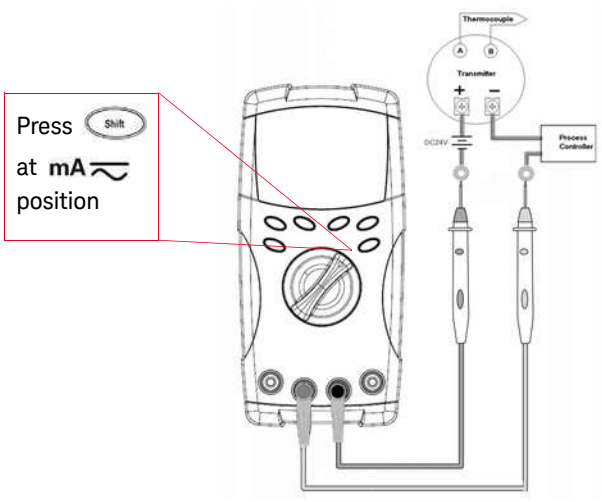

The % scale of 0 – 20 mA or 4 – 20 mA is selectable in setup mode. The mA% scale for 4-20 or 0-20 is indicated on primary display and the bar graph indicates the current value. The 25% scale readout represents DC 8 mA at 4 – 20mA, and DC 5 mA at 0 – 20mA.

Measuring Frequency

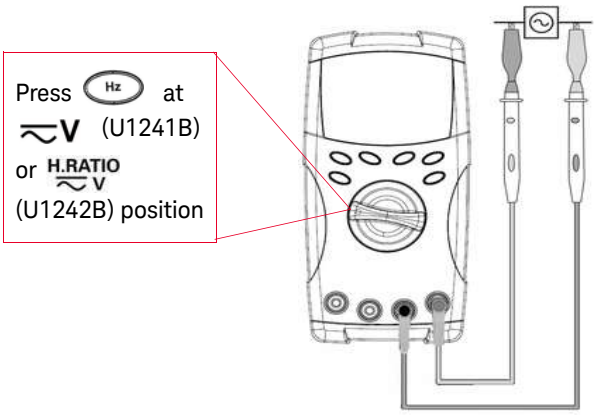

The frequency measurement is applicable for DC and AC current measurements.

The bar graph is used to indicate the value of AC voltage. Alternatively, press Range button to display the value of AC voltage. The multimeter will return to frequency value display automatically after three seconds.

Measuring Resistance and Testing Continuity

CAUTION Disconnect circuit power and discharge all high-voltage capacitors before measuring resistance to prevent possible damage to the multimeter or the device under test.

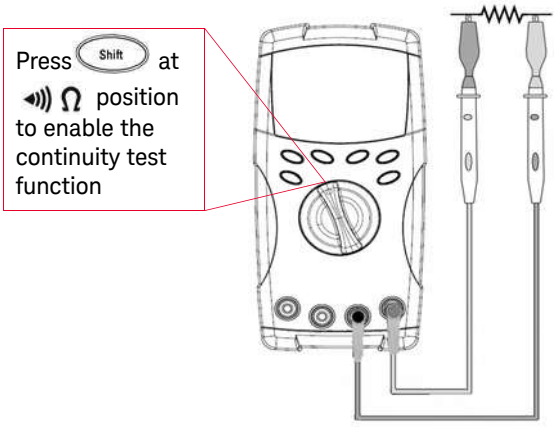

Measurement range	Beeper sound threshold
1000.0 Ω	< 10 Ω
10.000 kΩ	< 100 Ω
100.00 kΩ	< 1 kΩ
1.0000 MΩ	< 10 kΩ
10.000 MΩ	< 100 kΩ
100.00 MΩ	< 1 MΩ

NOTE Press Range button to select measurement range from 1 kΩ to 100 MΩ.

Testing Diodes

CAUTION Disconnect circuit power and discharge all high-voltage capacitors before testing diodes to prevent possible damage to the multimeter.

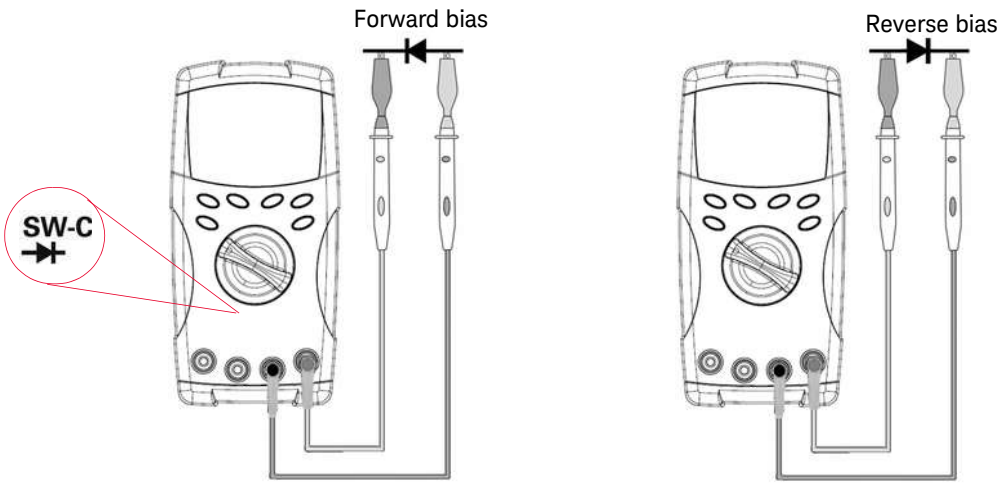

NOTE The multimeter can display diode forward bias of up to approximately 1.1 V. Typical diode forward bias is between the range of 0.3 to 0.8 V range with audible beeper sound.

Measuring Capacitance

CAUTION Disconnect circuit power and discharge all high-voltage capacitors before measuring capacitance to prevent possible damage to the multimeter or the device under test. To confirm that capacitors have discharged, use the DC voltage function.

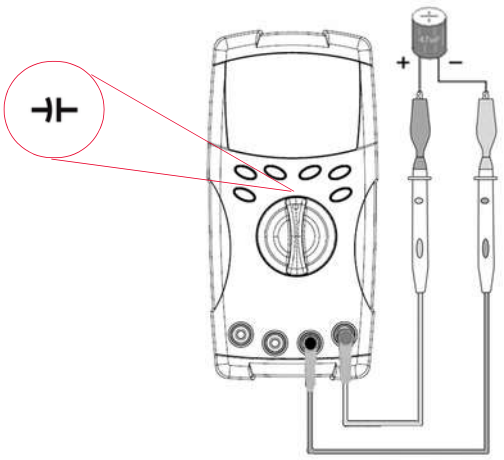

Measuring tips:

- For measuring capacitances greater than 10,000 µF, discharge the capacitor and manually select a suitable measurement range. This will speed up measuring time in order to obtain the correct capacitance value.
- Ensure the correct polarity when measuring polarized capacitors.
- For measuring small capacitances, press ΔNull with the test leads open to subtract the residual capacitance of the multimeter and leads.

Measuring Temperature

CAUTION

- Do not bend the thermocouple leads at sharp angles. Repeated bending over a period of time can break leads.
- Do not contact the temperature sensor to any surface that is energized voltage or current sources, such the voltage source will pose a shock hazard.

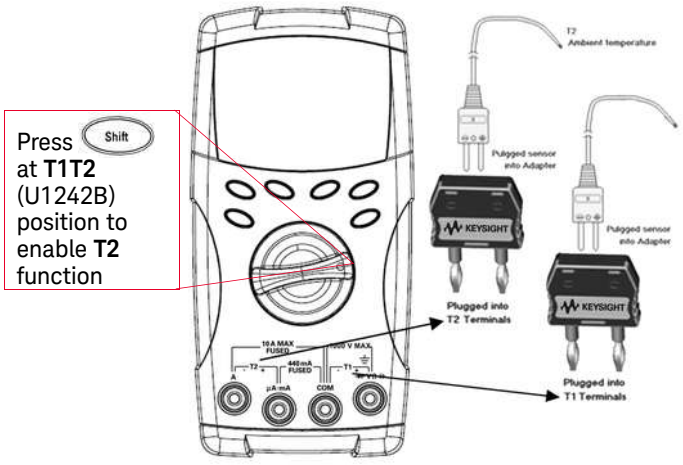

Measuring tips:

- Clean the measurement surface and remember to disable the applied power.
- When measuring temperature, move the thermocouple along the surface until you get the highest/ lowest temperature reading.
- For quick measurement, use the 0 °C compensation to see the temperature variation of the thermocouple sensor. The 0 °C compensation assists you in measuring relative temperature.

If you are working in a varied environment, where ambient temperature is not constant, do the following:

1. Press Range for more than one second to enable 0 °C compensation. This function allows a quick measurement of the relative temperature.
2. Avoid contact between the thermocouple probe and the measurement surface.
3. After a constant reading is obtained, press ΔNull to set the reading as the relative reference temperature.
4. Touch the measurement surface with the thermocouple probe.
5. Read the display for the relative temperature.

NOTE The T2 temperature measurement is only available for U1242B.

Measuring Harmonic Ratio (U1242B)

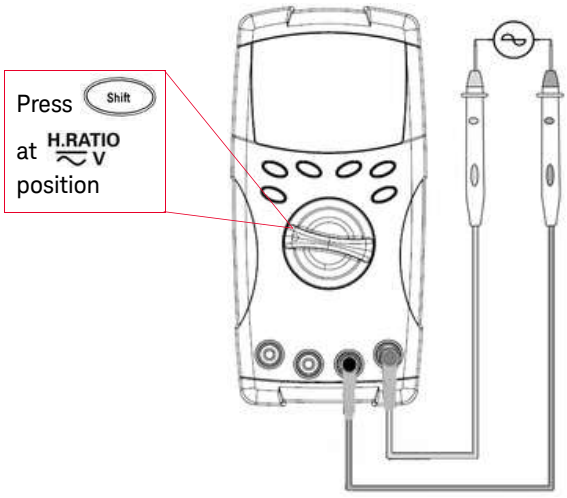

Harmonics ratio function indicates the deviation of non-sinusoidal to sinusoidal waveform from the range of 0% to 100%. A pure sinusoidal waveform without harmonics gives a value of 0.0%.

Alternatively, press Range button to display the RMS value of AC voltage. The multimeter will resume back to harmonic ratio value display automatically after 3 seconds.

Using Switch Counter

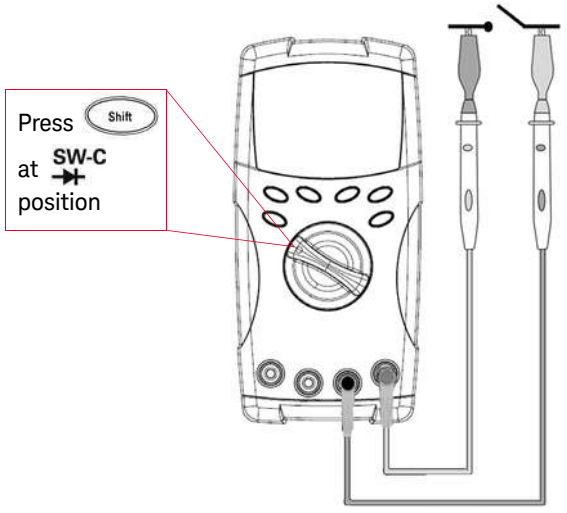

The switch counter is used to check the open/close condition of a switch, relay or push button. The multimeter provides the time base of 10 and 100 seconds, or user-defined time base.

This function detects switch condition in normally close (Low level) or normally open (High level) of a circuit with voltage less than 3 V. The switch counter counts the intermittent for longer than 250 µsec.

1 Remove the power on the contacts or switch before measured.

2 Press Shift at SW-C position to activate the switch counter function. The multimeter will detect the switch condition as shown in Table 2-1.

Table 2-1 Annunciator display for each switch condition

Switch Condition	Circuit Switch	Display
Low Level (< 430 Ω)	Normally close	Lo
Intermittent	Close to open	Number of switch count
Intermittent	Open to close	Number of switch count
High level	Normally open	Hi

3 Press ΔNull to restart the switch counter, the multimeter will check the current switch condition and set intermittent recognition for the counter.

4 Press Range to select time base in 10 seconds, 100 seconds or Hand (user-defined). The second display shows **10**, **100** or **HAn** respectively.

5 The first intermittent will cause the multimeter to beep and starts to down count the time base. Each intermittent will increase the counter once.

6 The counter value and time base are indicated on primary display and secondary display respectively. Press ΔNull to start next counting.

7 Press Shift to exit switch counter function.

MinMax Recording

The MinMax operation stores the maximum, minimum, and average input values during a series of measurements. When the input goes below the recorded minimum or maximum value, the multimeter beeps and records the new value. The multimeter also calculates an average of all readings taken since the MinMax mode was activated. From the multimeter's display, you can view the following statistical data for any set of readings:

- **MAX**: highest reading since the MinMax function was enabled
- **MIN**: lowest reading since the MinMax function was enabled
- **AVG**: the average or mean of all the readings since the MinMax function was enabled
- **MAXMINAVG**: present reading (actual input signal value)

Refer to the following steps to use the MinMax Recording mode:

1 Press Hold for more than one second to enter the MinMax Recording mode. The multimeter is now in the continuous mode or non-data hold (non-trigger) mode.

2 The beeper sounds when a new maximum or minimum value is recorded.

3 Press Hold to scroll through the maximum, minimum, average, and present readings. The **MAX**, **MIN**, **AVG** or **MAXMINAVG** annunciator lights up correspondingly to the displayed readings.

4 Press Hold for more than one second to exit the MinMax Recording mode.

NOTE

- The average value is the true average of all measured values taken in the MinMax Recording mode.
- If an overload is recorded, the averaging function will stop and the average value becomes **OL** (overload).
- The auto power off feature (Auto OFF) is disabled in MinMax Recording mode.

Data Hold (Trigger Hold)

The data hold function allows users to freeze the displayed digital value.

1 Press Hold to freeze the displayed value and to enter manual trigger mode. Notice the HOLD annunciator is displayed.

2 Press Hold to trigger the freeze of the next value being measured. The HOLD annunciator will flash before the new value is updated onto the display.

3 Press Hold for more than one second to exit this mode.

Refresh Hold

Users are required to activate the Refresh Hold in the setup mode.

1 Press Hold to enter Refresh Hold mode. The present value will be held, and the HOLD annunciator is displayed.

2 The multimeter is ready to hold new measuring value once the variation of measuring value exceeds the setting of variation count, and the HOLD annunciator is flashed.

3 The hold value will be updated until the measuring value is stable. The HOLD annunciator will stop flashing and stays lit, an audible tone will sound to remind user.

4 Press Hold again to disable this function.

NOTE

- **For voltage, current and capacitance measurements, the holding value will not be updated if the reading is below 50 counts.**
- **For resistance and diode measurements, the holding value will not be updated if the reading is in "OL" (open state).**
- **The holding value may not be updated if the reading does not reach stable state for all measurements.**

Null (Relative)

The Null function subtracts a stored value from the present measurement and displays the difference between the two values.

1 Press ΔNull to store the displayed reading as the reference value to be subtracted from subsequent measurements and to set the display to zero. The **NULL** annunciator is displayed.

2 Press ΔNull to view the stored reference value. The **NULL** annunciator will flash for three seconds before the display returns to zero. To exit this mode, press ΔNull while **NULL** is flashing on the display.

NOTE

- In resistance measurement, the multimeter reads a non-zero value due to the presence of test leads resistance. Use the Null function to zero-adjust the effect of test lead resistance.
- In DC voltage measurement, the thermal effect will influence the accuracy. Short the test leads and press ΔNull once the displayed value is stable in order to zero out the offset.

Data Logging (U1242B)

The data logging function stores the data in non-volatile memory. Thereby, the data remains saved when the multimeter is turned off. Data logging records only the value on primary display. Two options of data logging are offered – Hand (manual) logging and Interval (automatic) logging functions.

Table 2-2 Functions available for data logging

Function	Mode	Range
Voltage	DC, AC	1000 mV to 1000 V
Current	DC, AC, % of mA	1000 μA to 10 A
Hz	AC	Auto
Harmonic Ratio	AC	Auto
Ω	Continuity	1000 Ω to 100 MΩ
Diode		1.1 V
Switch Counter		10, 100, HAn
Capacitance		1000 nF to 10 mF
Temperature	T1, T2, T1 – T2,	
Relative		
Recording mode	MAX, MIN, AVG, MAXMINAVG	
HOLD		

Manual Logging

To enable the Hand (manual) logging function, select the Hand logging mode in Setup mode.

1. Press Hz for more than 1 second to store the present value and function on the primary display to the non-volatile memory. The LOG annunciator and the logging index will be indicated. The logging index flashes on the secondary display for 3 seconds before returning to normal display.
2. Press and hold Hz again for the next value that you would like to save into the memory.

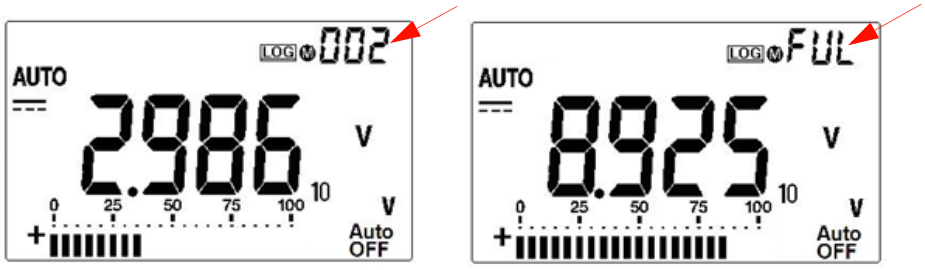

Figure 2-1 Manual logging display

NOTE Maximum data that can be stored is 100 entries. When the 100 entries are filled, **FUL** annunciator is indicated on the secondary display.

Interval Logging

To enable the Interval (automatic) logging function, select the Interval logging by defining the interval setting in Setup mode.

1. Press Hz (Log) for more than one second to store the present value and function on primary display to memory.
2. The reading automatically logs into the memory in every interval as preset in Setup mode, see Figure 2-2.
3. Press Hz (Log) for more than one second to exit this mode.

NOTE When interval (automatic) logging is enabled, all keypad operation is disabled, except for Log function.

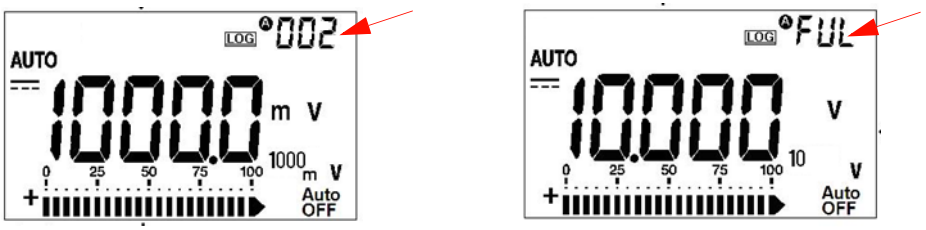

Figure 2-2 Interval logging display

NOTE Maximum data that can be stored is 200 entries. When the 200 entries are filled, **FUL** annunciator is indicated on the secondary display.

Reviewing Logged Data

1. Press Shift (View) for more than one second to enter Log View mode. The last recorded entry and last logging index are displayed on the secondary display.
2. Press ▲ to ascend or ▼ to descend through logged data. Press ◀ to select the first record and press ▶ to select the last record for quick navigation.
3. Press Shift to switch between hand (manual) and interval (automatic) logging review mode.
4. Press Shift (View) for more than one second to exit Log View mode.

Removing Logged Data

Press Hz (Log) for more than one second at the respective Log Review mode (hand or interval) to clear all logged data in the memory.

Scanning Temperature Measurement (U1242B)

This scanning temperature measurement function allows users to measure and display temperature T1, T2 and T1-T2 sequentially.

1. Press and hold ΔNull (Scan) button for more than one second to enable Scan mode. Notice the multimeter will scan through and display the value of T1, T2 and T1-T2 periodically.
2. The multimeter will set to the states for T1, T2 or T1-T2 when you disabled Scan mode by pressing ΔNull (Scan) for more than one second.

Checking Battery Capacity

The battery sign will flash when the battery voltage drops below 4.4 V. Once the low battery sign is displayed, it is highly recommended to replace the batteries immediately. See Battery Replacement in chapter 4.

To check the battery capacity, see the following steps:

1. Press (Bat) for more than one second to view the battery capacity. The multimeter will resume back to normal function automatically after three seconds.
2. The primary display illustrates the flashing **bAt** annunciator and the bar graph indicates the battery capacity in proportional percentage from 4.2 V (0%) to 6.0 V (100%).

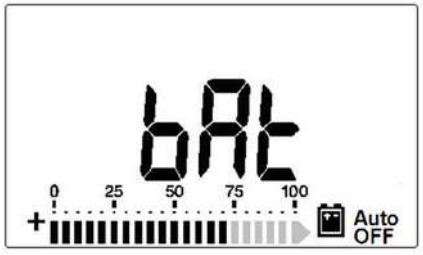

Figure 2-3 Battery capacity display

Alerts and Warning During Measurement

Overload Alert

WARNING **For your safety, please be aware of the alert. When you are alerted, just remove the test leads from the measuring source.**

The multimeter provides an overload alert for voltage measurement in both auto and manual range modes. The multimeter beeps periodically once the measuring voltage exceeds 1100.0 V. For your safety, please be aware of this alert.

Input-A Warning Alert

The multimeter sounds an alerting beep when the test lead is inserted to the **A** input terminal but the rotary switch is not set to the corresponding **A** location. The display indicates a flashing **AErr** annunciator until the test lead is removed from the **A** input terminal. This warning alert is not available in T1/T2 temperature measurements mode.

Input-mA Warning Alert

The multimeter sounds an alerting beep when the **µA/mA** input terminal detects a voltage level of more than 1.6 V. The display indicates a flashing **CErr** annunciator until the test lead is removed from the **µA/mA** input terminal.

THIS PAGE HAS BEEN INTENTIONALLY LEFT BLANK.

3 Default Setting Configurations

Setting Configurations 48

This chapter describes on how to change and configure the default setting of U1241B and U1242B handheld digital multimeters including data logging and other setting features.

Setting Configurations

1 Turn off the multimeter.

2 From OFF position, press and hold Shift (Setup) while turning the rotary switch to any non-OFF position.

NOTE **After you hear a beep, the multimeter is in Setup mode and you can release Shift button.**

To change a menu item setting in Setup mode, perform the following steps:

1 Press ◀ or ▶ to scroll through menu items.

2 Press ▲ or ▼ to scroll through available settings. See Table 3-1 for the details of each available option.

3 Press Range (Save) to save the changes. These parameters remain in the non-volatile memory.

4 Press and hold Shift (Setup) for more than one second to exit Setup mode.

Table 3-1 Available setting options in Setup mode

Menu item		Available setting options		Default factory setting
Setup	**Description**	**Selection**	**Description**	
rHd	Trigger hold	OFF	Enables Data Hold (manual trigger)	500
		100–1000	Sets variation count that determines Refresh Hold (auto trigger)	
SCA	Percentage scale	0–20 mA, 4–20 mA	Sets % scale readout for 0 to 20 mA or 4 to 20 mA	4–20 mA
FrE	Minimum frequency can be measured	0.5 Hz, 1 Hz, 2 Hz, 5 Hz	Sets the minimum frequency that can be measured in AC measurement mode	0.5 Hz
bEP	Frequency of beep sound	3746 Hz 2400 Hz, 1200 Hz, 600 Hz, 300 Hz	Sets frequency of beep sound of the multimeter	3746 Hz
		OFF	Disables beep sound of multimeter	
tP	Thermocouple	tYPE	Sets thermocouple type to K-type	tYPE K
		tYPE[a]	Sets thermocouple type to J-type (for U1242B)	
		tYPE mV	Sets 100 mV measurement for T1 input	
Log	Data logging (for U1242B)	Hand	Enables manual data logging	Hand
		1–9999	Sets interval for automatic data logging from 1 to 9999 seconds. Press Shift to toggle through the digit to be adjusted.	
APF	Auto power off[a]	1–99 m	Sets timer in minutes for auto power off	15 m
		OFF	Disables auto power off	
Lit	Backlight timer	1–99	Sets timer in seconds for auto turn-off for backlight display	15
		OFF	Disables auto turn-off for backlight display	
dAC	Default AC or DC for voltage and current measurements	dC, AC	Defines the preferred setup of AC or DC for voltage and current measurement once multimeter is turned on.	dC (For firmware version 2.13 and below)[b]
				AC (For firmware version 2.14 and above)[b]

Table 3-1 Available setting options in Setup mode (continued)

Menu item		Available setting options		Default factory setting
Setup	Description	Selection	Description	
rSt	Reset	dFAU	Resets the multimeter to the factory settings by pressing and holding Range for more than 1 second. A beep sound indicates the reset is being done.	dFAU
tñP	Temperature[c]	d-CF	Sets temperature measurement to °C, pressing Range to change measurement unit to °F	d-CF[d]
		d-F	Sets temperature measurement to °F	
		d-FC	Sets temperature measurement to °F, pressing Range to change measurement unit to °C	
		d-C	Sets temperature measurement to °C	

[a] To activate the multimeter after it has auto power off, press any button to resume back to respective functional mode.

[b] The firmware is factory-installed and is not field-upgradeable.

[c] To view Temperature (**tñP**) menu, press ☼ for more than one second.

[d] After this setting has been changed, resetting the multimeter will not revert it to the original default factory setting. The current setting will be the new default setting.

4 Service and Maintenance

General Maintenance 52
Battery Replacement 52
Fuse Replacement 54
Troubleshooting 55
Returning Instrument for Service 57

This chapter provides you with warranty services, maintenance procedures and troubleshooting hints to solve general problems that you may encounter with the instrument. Repair or service which are not covered in this manual should only be performed by qualified personnel.

General Maintenance

WARNING **To avoid electrical shock or damage to the multimeter, ensure no water stays inside the casing.**

Besides the above hazard, dirt or moisture in the terminals can distort readings. Cleaning steps are as follows:

1. Turn the multimeter off and remove the test leads.
2. Turn the multimeter over and shake out any dirt that may have accumulated in the terminals.
3. Wipe the case with a damp cloth and mild detergent – do not use abrasives or solvents. Wipe the contacts in each terminal with a clean swab dipped in alcohol.

Battery Replacement

WARNING **Do not discharge the battery by shorting the battery or reverse the battery polarity in any subjects.**

CAUTION **To avoid instruments being damage from battery leakage:**

- **Always remove dead batteries immediately.**
- **Always remove the batteries and store them separately if the multimeter is not going to be used for a long period.**

The multimeter is powered by 6.0 V (1.5 V x 4 batteries) which must be the specified battery type. To ensure that the multimeter performs as specified, it is recommended that you replace the battery as soon as the low battery indicator is flashing. See the following procedures for battery replacement:

1. At the rear panel, lift up the stand.
2. Loosen the screw on the battery cover.

3 Lift and remove the battery cover.

4 Replace the specified batteries, ensure the correct polarity of batteries.

5 Reverse the procedures of opening the cover to close the battery cover.

Battery Types	ANSI/NEDA	IEC
Alkaline	24A	LR03
Zinc Chloride	24D	R03

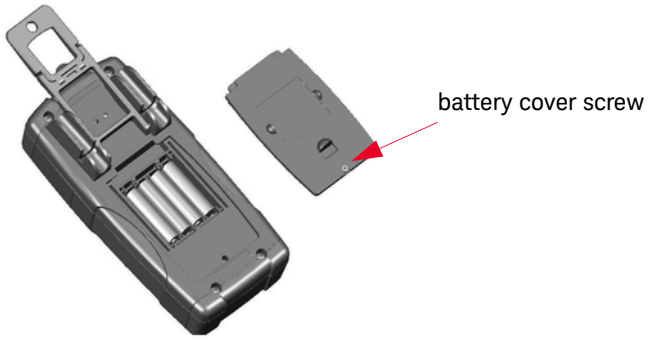

Figure 4-1 Battery replacement

Fuse Replacement

NOTE Users are recommended to use clean/dry gloves when performing fuse replacement. Do not touch any components except the fuse and plastic parts. No recalibration is required after replacing the fuse.

1. Turn off the multimeter and disconnect the test leads from external equipment.
2. Loosen four screws on bottom case, lift and remove the cover.
3. Gently remove the defective Fuse 1 by prying one end of the fuse and removing it out of the fuse bracket, see Figure 4-2.
4. Replace a new fuse of the same size and rating into the center of the fuse holder.

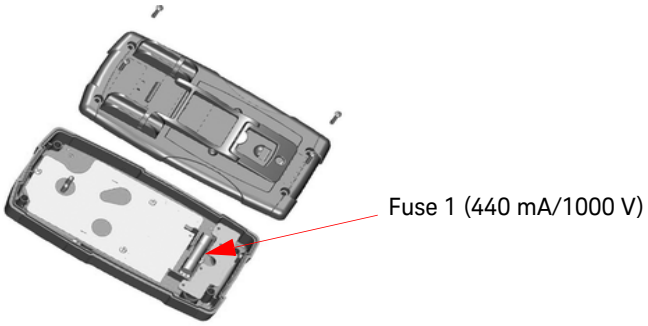

Figure 4-2 Fuse 1 replacement

5. If you want to replace a defective Fuse 2, remove Fuse 1 then loosen the four screws (shown in Figure 4-3) to lift and remove the circuit board from top case.
6. Gently remove the defective Fuse 2 by prying one end of the fuse loose and removing it out of the fuse bracket, see Figure 4-3.

7 Replace a new fuse of the same size and rating into the center of the fuse holder.

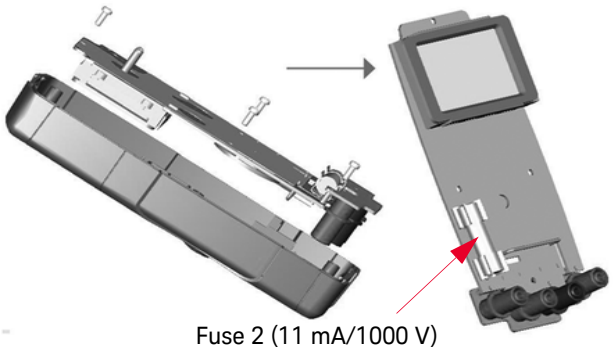

Figure 4-3 Fuse 2 replacement

8 Place Fuse 1 back to its original position and then re-fasten the circuit board and the bottom cover respectively.

Troubleshooting

WARNING **To avoid electrical shock, do not perform any service unless you are qualified to do so.**

If the instrument fails to operate, check the batteries and test leads, replace them if necessary. If the instrument still does not function, check the identification procedures as described in Table 4-1.

Table 4-1 Basic troubleshooting hints

Malfunction	Identification
No LCD display after power ON	– Check the battery polarity and replace batteries if necessary. Ensure that the replaced batteries are new batteries, it is recommended not to mix old batteries with new batteries.
No beeper tone	– Check setup mode and verify if the beeper is set to OFF. Then select the desired driving frequency.
Failed on current measurement	– Check the fuse.

When servicing, use the specified replacement parts only. The Table 4-2 shows the replacement part numbers.

Table 4-2 List of replacement part numbers

Part number	Description
2110-1400	Fast blow fuse 1000 V, 0.44 A (10 mm x 35 mm)
2110-1402	Fast blow fuse 1000 V, 11 A (10 mm x 35 mm)
U1241-46400	Battery cover (without screw)
5190-2573	Battery cover screw

Returning Instrument for Service

Before shipping your instrument for repair or replacement, Keysight recommends that you acquire the shipping instructions from the Keysight Technologies Service Center. A clear understanding of the shipping instructions is necessary to secure your product for shipment.

1. Write the following information on a tag and if attach to the instrument.
   - Name and address of owner
   - Instrument model number
   - Instrument serial number
   - Description of the service required or failure indications
2. Remove all accessories from the instrument. Do not include accessories unless they are associated with the failure symptoms.
3. Protect the instrument by wrapping it in plastic or heavy paper.
4. Pack the instrument in foam or other shock absorbing material and place it in a strong shipping container.

   You are recommended to use the original shipping material or order materials from a Keysight Technologies Sales Office. If both options are not available, place 8 to 10 cm (3 to 4 inches) of shock- absorbing and static-free packaging material around the instrument to avoid movement during shipping.
5. Seal the shipping container securely.
6. Mark the shipping container as FRAGILE.

   In the ensuing correspondence, refer to the instrument by its model number and full serial number.

Keysight suggests that you always insure your shipments.

THIS PAGE HAS BEEN INTENTIONALLY LEFT BLANK.

5 Performance Tests and Calibration

Calibration overview Calibration Overview 60
Recommended Test Equipment 62
Basic Operating Test 63
Calibration Process 64
Test Considerations 65
Performance Verification Tests 66
Calibration Security 71
Adjustment Considerations 74
Calibration Adjustments 76
Calibration Count 82
Calibration Errors 82

This chapter contains procedures of performance verification tests and calibration adjustments. The performance tests is meant to verify the U1241B or U1242B handheld digital multimeter to ensure the multimeter is operating within its published specifications.

Calibration Overview

NOTE Ensure that you have read Test Considerations before calibrating the multimeter.

Closed-case Electronic Calibration

The multimeter features closed-case electronic calibration. No internal mechanical adjustments are required. The multimeter calculates correction factors based upon the input reference value you set. The new correction factors are stored in non-volatile memory until the next calibration adjustment is performed. Non-volatile EEPROM calibration memory does not change when power has been off.

Calibration Interval

A 1-year interval is adequate for most applications. Accuracy specifications are warranted only if adjustment is made at regular calibration intervals. Accuracy specifications are not warranted beyond the 1-year calibration interval. Keysight does not recommend extending calibration intervals beyond 2 years for any application.

Adjustment is Recommended

Specifications are only guaranteed within the period stated from the last adjustment. Keysight recommends that readjustment should be performed during the calibration process for best performance. This will assure that the U1241B/ U1242B will remain within specification. This criteria for re-adjustment provides the best long–term stability.

Performance data is measured during Performance Verification Tests and does not guarantee the multimeter will operate within the test limits unless the adjustment is performed.

Refer to Calibration Count to verify that all adjustments have been performed.

Recommended Test Equipment

The test equipment recommended for the performance verification and adjustment procedures is listed below. If the exact equipment is not available, substitute the calibration standards of equivalent accuracy.

Table 5-1 Recommended test equipment

Application	Recommended Equipment	Recommended Accuracy Requirements
DC Voltage	Fluke 5520A	<1/5 instrument 1 year specifications
DC Current	Fluke 5520A	<1/5 instrument 1 year specifications
AC Voltage	Fluke 5520A	<1/5 instrument 1 year specifications
AC Current	Fluke 5520A	<1/5 instrument 1 year specifications
Resistance	Fluke 5520A	<1/5 instrument 1 year specifications
Frequency	Fluke 5520A	<1/5 instrument 1 year specifications
Capacitance	Fluke 5520A	<1/5 instrument 1 year specifications
Diode	Fluke 5520A	<1/5 instrument 1 year specifications
Temperature	Fluke 5520A	<1/5 instrument 1 year specifications
	TM Electronics KMPC1MP (K-Type thermocouple extension)	–
Short	Pomona MDP-S	<1/5 instrument 1 year specifications

Basic Operating Test

Basic Operating Test is used to test the basic operability of the multimeter. Repair is required if the multimeter fails the Basic Operating Test.

Backlight Test

To test the backlight function, press momentarily to turn backlight ON at medium level of brightness intensity. Press again to toggle the highest level of brightness intensity. The backlight turns OFF automatically after setting period.

Alternatively, you can press for the third time to turn the backlight OFF.

Testing the Display

To view all segments of the display, press and hold the Hold button while turning the rotary switch from OFF to any non-OFF position. Compare the display with the Figure 5-1.

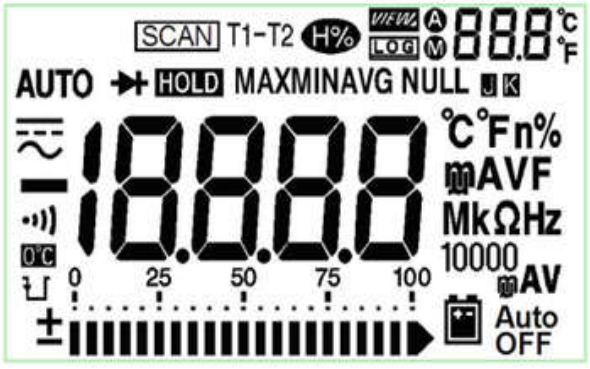

Figure 5-1 Annunciator display

Input-A Terminal Test

This test determines if the input warning of the **A** current terminal test is functioning properly. The multimeter sounds an alerting beep when the test lead is inserted to the **A** input terminal but the rotary switch is not set to the corresponding **A** location. The display indicates a flashing **AErr** annunciator until the test lead is removed from the **A** input terminal. This warning alert is not available in T1/T2 temperature measurements mode.

Input-mA Terminal Alert Test

This test determines if the detected input voltage level is within the accepted boundaries when the **μA/mA** input terminal is connected. The multimeter sounds an alerting beep when the **μA/mA** input terminal detects a voltage level of higher than 1.6 V. The display indicates a flashing **CErr** annunciator until the test lead is removed from the **μA/mA** input terminal.

NOTE **The alerting beep will not be impacted even if the beep function is disabled.**

Calibration Process

1. Prior to performing the verification tests, see Test Considerations.
2. Perform the verification tests to characterize the multimeter, see Performance Verification Tests.
3. Unsecure the multimeter for calibration, see Calibration Security.
4. Prior to performing the adjustments, see Adjustment Considerations.
5. Perform the adjustment procedures, see Calibration Adjustments.
6. Secure the multimeter against unauthorized calibration, see Exiting Adjustment Mode. Ensure that the multimeter has quit the Adjustment Mode and turned off.
7. Record the new security code and calibration count in the multimeter's maintenance records.

Test Considerations

Error may be induced by AC signals that present on the input leads. Long test leads can also act as an antenna causing pick-up of AC signals.

For optimum performance, all procedures should comply with the following recommendations:

- Ensure that the calibration ambient temperature is stable and between 18 °C and 28 °C. Ideally the calibration should be performed at 23 °C ± 2 °C.
- Ensure that the ambient relative humidity (RH) is less than 80%.
- Ensure that the low battery indicator does not appear during the performance verification test. If it does, replace the batteries to avoid any inaccurate reading.
- During temperature performance verification test, ensure that the multimeter has been switched ON and placed in the test environment for at least one hour with J/K-type thermo-couple connected between the multimeter and calibration source.
- Allow one minute warm-up period with a Shorting Plug connected to the V and COM input terminals.
- Use shielded twisted pair PTFE-insulated cables to reduce settling and noise errors. Keep the input cables as short as possible.
- Connect the input cable shields to earth ground. Except where noted in the procedures, connect the calibrator **LO** source to earth ground at the calibrator. It is important that the **LO** to earth ground connection be made at only one place in the circuit to avoid ground loops.

During DC voltage, DC current, and resistance gain verification measurements, ensure that the calibrator's "**0**" output is correct. It is recommended to set the offset for each range of the measuring function being verified.

Input Connections

Test connections to the multimeter are best accomplished using the K-type thermocouple wire and mini-connectors for temperature measurement. The J-type thermocouple wire and mini-connectors can also be used for temperature measurements (for U1242B). Shielded, twisted-pair, PTFE interconnect cables of minimum length are recommended between the calibrator and the multimeter. Cable shields should be earth ground referenced. This configuration is recommended for optimal noises and settling time performance during calibration.

Performance Verification Tests

The performance verification tests are recommended as acceptance tests when you first receive the multimeter. The acceptance test results should be compared against the one year test limits. After acceptance, you should repeat the performance verification tests at every calibration interval.

If the multimeter fails performance verification, adjustment or repair is required.

NOTE **Users are highly recommended to read the Test Considerations before performing performance verification tests.**

Table 5-2 Verification Tests

Step	Test Function	Range	5520A Output	Error from nominal 1 year	
				U1241B	U1242B
1	Turn the rotary switch to ≂V position	1000 mV	1000.0 mV	± 1.4 mV	
		10 V	10.000 V	± 11 mV	
		100 V	100.00 V	± 110 mV	
		1000 V	1000.0 V	± 2 V	
2	Press Shift to go to ~ V function	1000 mV	1000.0 mV, 500 Hz	± 10.5 mV	
			1000.0 mV, 1 kHz	± 20.5 mV	
		10 V	10.000 V, 500 Hz	± 105 mV	
			10.000 V, 1 kHz	± 105 mV	
			10.000 V, 2 kHz	± 205 mV	
		100 V	100.00 V, 500 Hz	± 1.05 V	
			100.00 V, 1 kHz	± 1.05 V	
			100.00 V, 2 kHz	± 2.05 V	
		1000 V	1000.0 V, 1 kHz	± 10.5 V	
3	Press Hz to go to frequency mode	100 Hz	1.000 V, 70 Hz	± 51 mHz	
		1000 Hz	1.000 V, 1000 Hz	± 600 mHz	
		10 kHz	1.000 V, 2 kHz	± 3.6 Hz	
4	Turn the rotary switch to ⊣▶ position	Diode	1.000 V	± 5 mV	

Table 5-2 Verification Tests (continued)

Step	Test Function	Range	5520A Output	Error from nominal 1 year	
				U1241B	U1242B
5	Turn the rotary switch to Ω position	1000 Ω [g]	1000.0 Ω	± 3.3 Ω[a]	
		10 kΩ [g]	10.000 kΩ	± 33 Ω[a]	
		100 kΩ [g]	100.00 kΩ	± 330 Ω	
		1000 kΩ	1000.0 kΩ	± 3.3 kΩ	
		10 MΩ	10.000 MΩ	± 83 kΩ	
		100 MΩ	100.00 MΩ	± 1.53 MΩ[b]	
6	Turn the rotary switch to ⊣⊢ position	1000 nF	1000.0 nF	± 12.4 nF	
		10 µF	10.000 µF	± 0.124 µF	
		100 µF	100.00 µF	± 1.24 µF	
		1000 µF	1000.0 µF	± 20.4 µF	
		10 mF	10.000 mF	0.204 mF	
7	Turn the rotary switch to µA ≂ position	1000 µA	1000.0 µA	± 1.3 µA	
		10000 µA	10000 µA	± 13 µA	
8	Press Shift to go to ∼ µA function	1000 µA	1000.0 µA, 500 Hz	± 10.5 µA	
			1000.0 µA, 1 kHz	± 15.5 µA	
		10000 µA	10000 µA, 500 Hz	± 105 µA	
			10000 µA, 1 kHz	± 155 µA	
9	Turn the rotary switch to mA ≂ position	100 mA	100.0 mA	± 0.23 mA	
		440 mA	400.0 mA[c]	± 2.3 mA	

Table 5-2 Verification Tests (continued)

Step	Test Function	Range	5520A Output	Error from nominal 1 year	
				U1241B	U1242B
10	Press Shift to go to ~ mA function	100 mA	100.00 mA, 500 Hz	± 1.05 mA	
			100.00 mA, 1 kHz	± 1.55 mA	
		440 mA	400 mA[c], 500 Hz	± 4.5 mA	
			400 mA[c], 1 kHz	± 6.5 mA	
11	Turn the rotary switch to A ~ position	10 A	10.000 A[d]	± 65 mA	
12	Press Shift to go to ~ A function	10 A	10.000 A[d], 500 Hz	± 105 mA	
		10 A	10.000 A[d], 1 kHz	± 155 mA	
13	Turn the rotary switch to **T1** or **T1T2**[e] position	–40 °C until 1000 °C	–40 °C	± 1.4 °C	
			0 °C	± 1°C	
			1000 °C	± 11°C	
14	Press Shift to go to **T2** function[e],[f]	–40 °C until 1000 °C	–40 °C		± 1.4 °C
			0 °C		± 1 °C
			1000 °C		± 11 °C

[a] The accuracy of 1 kΩ and 10 kΩ are specified after Math Null, that is used to substrate the test lead resistance and the thermal effect.

[b] For the range of 100 MΩ, the RH is specified for <60%.

[c] Current can be measured from 50 mA to 440 mA continuously. An addition of 0.2% to the specified accuracy when measuring a signal greater than 440 mA to 1100 mA for 30 seconds maximum. After measuring > 440 mA current, cool down the multimeter for twice the measuring time taken before proceed for low current measurement.

[d] Current can be measured from 0.5 A up to 10 A continuously with the maximum operating temperature of 50 °C. An addition 0.3% needs to be added to the specified accuracy if the signal measured is in the range of 10 A to 19.999 A for 15 seconds maximum. After measuring a current of > 10 A, leave the multimeter to cool down for 60 seconds before applying low current measurement.

[e] Set both calibrator and multimeter to internal reference.

To perform the measurement, connect the K-type thermocouple extension (with miniature thermocouple connector on both ends) between the calibrator's TC output and multimeter via a TC-to-banana adapter

Allow at least 1 hour for the multimeter to stabilize before measurements are taken.

The error limit does not include the error contributed by the thermocouple extension. To eliminate the thermocouple error, compensation of the calibrator output through a reference thermometer is recommended.

Ensure that the ambient temperature is stable within ± 1°C. Make sure that the multimeter is placed in a controlled environment for at least 1 hour. Keep the multimeter away from any ventilation exit. Do not touch the thermocouple test lead after connecting it to the calibrator. Allow the connection to stabilize for at least another 15 minutes before performing the measurement.

[f] Only available in U1242B.

[g] With a 2-wire connection and compensation enabled at calibrator.

Calibration Security

The calibration security code prevents accidental or unauthorized adjustments to the multimeter. The multimeter is secured when the multimeter is shipped from factory. Before performing any adjustment to the multimeter, you are required to unsecure the multimeter by entering the correct security code (see Unsecuring the Multimeter for Calibration). The security code may contain up to 4 numeric characters.

NOTE **You can unsecure and change the security code from the multimeter front panel. If you forget your security code, see Unsecuring the Multimeter Without the Security Code.**

Unsecuring the Multimeter for Calibration

Before performing adjustment to the multimeter, you are required to unsecure the multimeter by entering the correct security code. The security code is set to 1234 when the multimeter is shipped from the factory. The security code is stored in non-volatile memory, and does not change when power is off.

Unsecuring the Multimeter from the Front Panel

1 Turn the rotary switch to ≂V .

2 Press Shift and Hz simultaneously to enter the Calibration Security Code entry mode. The primary display shows **5555** and the secondary display shows **SEU**.

3 Press ☼ or Hz to step each character in the code. Press Hold or ΔNull to change the value of the selected character.

4 Press Range (Save) when done.

5 If the correct security code is entered, the secondary display will show "**PAS**". If an invalid code is entered, the multimeter will shows error code "**E02**" on the

secondary display for approximately 3 seconds and return to the Calibration Security entry mode.

Changing the Multimeter Calibration Security Code from the Front Panel

1. When the multimeter is in the unsecured mode, press Shift button for more than one second to enter Calibration Security Code setting mode.
2. The factory default calibration security code 1234 will be displayed on primary display.
3. Press ☼ or Hz to step each character in the code. Press Hold or ΔNull to change the value of the selected character.
4. Press Range (Save) button, to store new calibration security code.
5. If the new calibration security code has been successfully stored, the secondary display will show PASS. If the new code failed to save, the multimeter will shows error code **E07** on the secondary display for approximately 3 seconds and return to the Calibration Security Code setting mode.

Unsecuring the Multimeter Without the Security Code

1. Record the last 4 digit serial numbers of the multimeter.
2. Turn the rotary switch to ≂V .
3. Press Shift and Hz simultaneously to enter the Calibration Security Code entry mode. The primary display shows **5555** and the secondary display shows **SEC**.
4. Press Shift for more than one second to enter Set Default Security Code mode. The secondary display shows **SEr** and primary display shows "**5555**".
5. Press ☼ or Hz to step each character in the code. Press Hold and ΔNull to change the value of the selected character.

6 Set the code, same as the last 4 digit serial number of the multimeter. Press Range (Save) to confirm the entry.

7 If the 4 digit serial number entered is correct, the secondary display will show **PAS**. If an invalid code is entered, the multimeter will show error code **E03**. Ensure that the last 4 digit serial number is entered correctly and repeat the step 1 to 7.

Using the Front Panel for Adjustments

This section describes the process used to perform adjustments from the front panel.

Selecting the Adjustment Mode

Unsecure the multimeter, see Unsecuring the Multimeter for Calibration or Unsecuring the Multimeter Without the Security Code. Once the multimeter has been unsecured, the reference value will be indicated on the primary display.

Entering Adjustment Values

1 Press ☼ and Hz to step through each character in the primary display.

2 Press Hold and ΔNull to change the value of the corresponding character from digits 0 through 9.

3 Apply the respective corresponding input signal from the recommended test equipment in Table 5-1.

4 Press Range (Save) when done to start calibration.

NOTE Ensure that the accuracy of the input signal adheres to the Valid Adjustment Input Values in Table 5-3.

Adjustment Considerations

NOTE After each adjustment, the secondary display shows **PAS**. If the calibration fails, the multimeter beeps, and an error number is shown in the secondary display. Calibration error messages are described in Calibration Errors.

1. Allow the multimeter to warm up and stabilize for five minutes before performing the adjustments.
2. Assure that the low battery indicator does not appear during the adjustment. Replace the batteries to avoid inaccurate readings.
3. Consider the thermal effects of the test leads connected to the calibrator and multimeter. It is recommended to wait for one minute before start performing the calibration.
4. During ambient temperature adjustment, ensure that the multimeter has been turned on for at least one hour with K-type thermocouple connected between the multimeter and calibration source.

CAUTION Do not turn off the multimeter during adjustments., as this may delete the calibration memory for the present function.

Valid Adjustment Input Values

Adjustment can be accomplished using the following input values below.

Table 5-3 Valid adjustment input values

Function	Range	Valid Input Reference Values
~ V	1000 mV, 10 V, 100 V, 1000 V	0.9 to 1.1 x Full Scale
⎓ V	1000 mV, 10 V, 100 V, 1000 V	0.9 to 1.1 x Full Scale
⊣▶	1 V	0.9 to 1.1 x Full Scale
Ω	1000 Ω, 10 kΩ, 100 kΩ, 1000 kΩ, 10 MΩ	0.9 to 1.1 x Full Scale
⊣⊢	1000 nF, 10 µF, 100 µF, 1000 µF, 10 mF	0.9 to 1.1 x Full Scale
µA ~	1000 µA, 10000 µA	0.9 to 1.1 x Full Scale
mA ~	100 mA, 1000 mA	0.9 to 1.1 x Full Scale
A ~	10 A	0.9 to 1.1 x Full Scale
T1	0 °C	Ensure that 0 °C with ambient compensation is provided
DCmV (T1)	100 mV	0.9 to 1.1 x Full Scale

CAUTION The minimum AC current output of Fluke 5520A calibrator is 29 µA. Ensure that at least 50 µA is set at the calibrator source of AC µA.

Calibration Adjustments

NOTE Review the Test Considerations and Adjustment Considerations before beginning the adjustment procedures.

1. Turn the rotary switch to **Test Function** position, as shown in Table 5-3.
2. After unsecuring the multimeter, the multimeter will go into the adjustment mode, see Unsecuring the Multimeter for Calibration.
3. The primary display will show the reference value of the Cal Items. Configure each Cal Item shown in Valid Adjustment Input Reference Values in Table 5-3.
4. Use the Hold and ΔNull arrow keys to select the Cal Range.
5. Apply the input signal as shown in the **Valid Input Reference Value** column of the Table 5-3. The bar graph will display the input reading. There is no bar graph display for temperature adjustment.

NOTE Users are highly recommended to complete the adjustments in the same order as shown in Table 5-3.

6. Enter the actual applied input, see Entering Adjustment Values.
7. Press Range to start the adjustments. The **CAL** flashes in the secondary display indicating the calibration is in progress.
8. Upon completion of each adjustment value, the secondary display will show **PAS**. If the adjustment failed, the multimeter will sound a long beep and the calibration error number appears in the secondary display. The primary display remains at the current Cal Item.

NOTE If the adjustment failed, check the input value, range, function, and entered adjustment value and repeat the adjustment steps.

9 Turn the rotary switch to the next function according to the **Test Function** column shown in Table 5-3. Repeat steps 3 to 8 for each adjustment point shown in the calibration adjustment, see Table 5-4.

10 Verify the adjustments using the Performance Verification Tests.

Table 5-4 Calibration Adjustments

Step	Test Function	Cal Range	Input Reference Value	Cal Item	
				U1241B	U1242B
1	Turn the rotary switch to ≂V position	Short	Dual banana plug with copper wires short between two terminals	SHrt	
		1000 mV	1 V	1000.0 mV	
		10 V	10 V	10.000 V	
		100 V	100 V	100.00 V	
		1000 V	1000 V	1000.0 V	
2	Press Shift to go to ~ V function	1000 mV	30 mV, 70 Hz	30.0 mV	
			1000 mV, 70 Hz	1000.0 mV	
			1000 mV, 1 kHz	1000.0 mV	
		10 V	1 V, 70 Hz	1.000 V	
			10 V, 70 Hz	10.000 V	
			10 V, 1 kHz	10.000 V	
		100 V	10 V, 70 Hz	10.00 V	
			100 V, 70 Hz	100.00 V	
			100 V, 1 kHz	100.00 V	
		1000 V	100 V, 70 Hz	100.0 V	
			1000 V, 70 Hz	1000.0 V	
			1000V, 1 kHz	1000.0 V	

Table 5-4 Calibration Adjustments (continued)

Step	Test Function	Cal Range	Input Reference Value	Cal Item	
				U1241B	U1242B
3	Turn the rotary switch to ⊣◀ position	Short	Dual banana plug with copper wires short between two terminals	SHrt	
		1 V	1 V	1.000 V	
4	Turn the rotary switch to Ω position	Short	Dual banana plug with copper wires short between two terminals	SHrt	
		10 MΩ	Input terminals open (remove all test leads and shorting plugs from input terminals)	oPEn	
			10 MΩ	10.000 MΩ	
		1000 kΩ	1000 kΩ	1000.0 kΩ	
		100 kΩ	100 kΩ	100.00 kΩ	
		10 kΩ	10 kΩ	10.000 kΩ	
		1000 Ω	1000 Ω	1000 Ω	

Table 5-4 Calibration Adjustments (continued)

Step	Test Function	Cal Range	Input Reference Value	Cal Item	
				U1241B	U1242B
5	Turn the rotary switch to ⊣⊢ position	Open	Input terminals open (remove all test leads and shorting plugs from input terminals)	oPEn	
		1000 nF	400 nF	400.0 nF	
			1000 nF	1000.0 nF	
		10 µF	10 µF	10.000 µF	
		100 µF	100 µF	100.00 µF	
		1000 µF	1000 µF	1000.0 µF	
		10 mF	10 mF	10.000 mF	
6	Turn the rotary switch to µA≂ position	Open	Input terminals open (remove all test leads and shorting plugs from input terminals)	oPEn	
		1000 µA	1000 µA	1000.0 µA	
		10000 µA	10000 µA	10000 µA	
7	Press Shift to go to ~ µA function	1000 µA	50 µA, 70 Hz	50.0 µA	
			100 µA, 70 Hz	100.0 µA	
			1000 µA, 70 Hz	1000.0 µA	
		10000 µA	1000 µA, 70 Hz	1000 µA	
			10000 µA, 70 Hz	10000 µA	
8	Turn the rotary switch to mA≂ position	Open	Input terminals open (remove all test leads and shorting plugs from input terminals)	oPEn	
		100 mA	100 mA	100.00 mA	
		1000 mA	320 mA	320.0 mA	

Table 5-4 Calibration Adjustments (continued)

Step	Test Function	Cal Range	Input Reference Value	Cal Item	
				U1241B	U1242B
9	Press Shift to go to ~ mA function	100 mA	5 mA, 70 Hz	5.00 mA	
			10 mA, 70 Hz	10.00 mA	
			100 mA, 70 Hz	100.00 mA	
		1000 mA	100 mA, 70 Hz	100.0 mA	
			320 mA, 70 Hz	320.0 mA	
	Move the test lead from "μA.mA" and "COM" terminal to "A" and "COM" terminal **Caution: Connect the calibrator to the multimeter's "A" and "COM" terminal before applying 10 A**				
10	Turn the rotary switch to **A** ~ position	Open	Input terminals open (remove all test leads and shorting plugs from input terminals)	oPEn	
		10 A	10 A	10.000 A	
11	Press Shift to go to ~ **A** function	10 A	0.5 A, 70 Hz	0.500 A	
			1 A, 70 Hz	1.000 A	
			10 A, 70 Hz	10.000 A	
12	Turn the rotary switch to **T1** or **T1T2** position[a]	Short	Dual banana plug with copper wires short between two terminals	SHrt	
		100 mV	100 mV	100.00 mV	
13	Press Shift to go to **T1** function[a]	K-type	0 °C	000.0 °C	

[a] – Set the 5520A to internal reference.

– Prior to performing adjustment, connect one end of the K-type thermocouple (with miniature TC connector on both ends) to the 5520A TC output, and the other end to a precision thermometer to verify that the source outputs the desired value. Adjust the source accordingly if necessary.

– To perform the adjustment, connect one end of the K-type thermocouple (with miniature TC connector on both ends) to the 5520A TC output, and the other end to the multimeter via a TC-to-banana adapter. Allow at least 1 hour for the multimeter to stabilize.

Exiting Adjustment Mode

1. Remove all shorting plugs and connectors from the multimeter.
2. Record the new Calibration Count, see Calibration Count.
3. Press 

and 

simultaneously to exit the Adjustment Mode. Power off and on the multimeter to return to normal measurement mode and secured.

Calibration Count

The multimeter provides the calibration count information for users to access through front panel operation. Note that the multimeter was calibrated prior to shipping out to users. Users are recommended to record the initial value of the calibration count once receiving the multimeter.

The count value increases by one for each calibration point, from 0000 up to the maximum of 19999. After the maximum count, the calibration count will be reset to 0. The calibration count can be read from the front panel after the multimeter has been unsecured, see the following steps:

1. In adjustment mode, press and hold 

for more than one second to view the calibration count viewing mode. The primary display indicates the calibration count value while the secondary display indicates "**Cnt**".
2. Take note of the calibration count to keep track of the number of calibration counts that has been performed.
3. Press and hold 

for more than one second to exit the calibration count mode.

Calibration Errors

The following error codes indicate failures that may occur during a calibration. The error code is displayed on secondary display.

Table 5-5 Calibration error codes

Code	Descriptions
200	Calibration error: Calibration mode is secured
E02	Calibration error: Invalid secure code
E03	Calibration error: Invalid serial number code
E04	Calibration error: Calibration aborted
E05	Calibration error: Value out of range
E06	Calibration error: Signal measurement out of range
E07	Calibration error: Frequency out of range
E08	EEPROM write failure

THIS PAGE HAS BEEN INTENTIONALLY LEFT BLANK.

6 Characteristics and Specifications

For the characteristics and specifications of the U1241B and U1242B Handheld Digital Multimeter, refer to the datasheet at http://literature.cdn.keysight.com/litweb/pdf/5989-7040EN.pdf.

THIS PAGE HAS BEEN INTENTIONALLY LEFT BLANK.

This information is subject to change without notice. Always refer to the Keysight website for the latest revision.

© Keysight Technologies 2009 - 2019
Edition 21, August 5, 2019

Printed in Malaysia

U1241-90063
www.keysight.com