HR6XS41S

Socket for relay with 4 C/O contacts, spring terminals



Product designation		SOCKET
Product type designation		HR6X

Contact characteristics

Rated insulation voltage Ui IEC/EN	V	250
Rated impulse withstand voltage Uimp	kV	4

Mechanical features

Fixing		On 35mm DIN rail

Dimensions

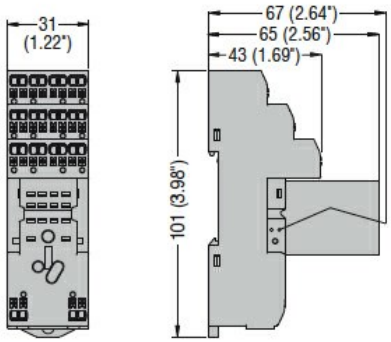

Wiring diagrams

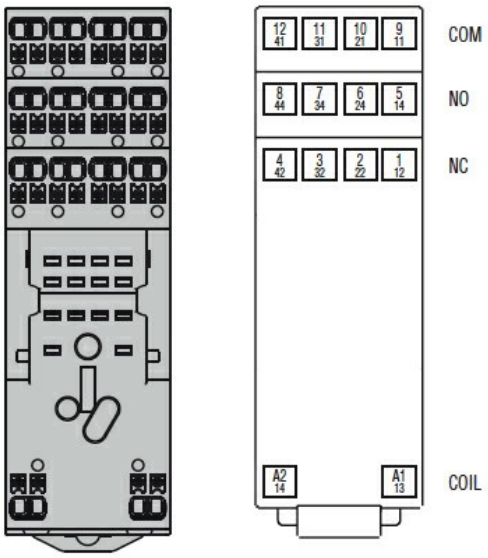

Certifications and compliance

Compliance	
	IEC/EN 61810
Certificates	
	CSA
	cURus
	EAC

ETIM classification

The characteristics described in this document are subject to updates or modifications at any time. The descriptions, technical and functional information, illustrations and instructions in this brochure are purely illustrative, and are consequently not contractually binding

ETIM 8.0

EC001456 -
Relay socket

The characteristics described in this document are subject to updates or modifications at any time. The descriptions, technical and functional information, illustrations and instructions in this brochure are purely illustrative, and are consequently not contractually binding