Product data sheet
Characteristics

XMPE12C2131
pressure sensor XMP - 12 bar- G 1/4 female - 3 NC- ON/OFF knob control

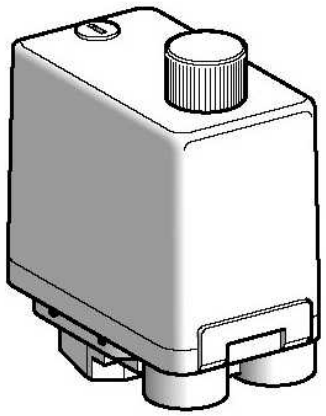

Main

Commercial Status	Commercialised
Range of product	OsiSense XM
Pressure sensor type	Electromechanical pressure sensor
Pressure sensor name	XMP
Pressure sensor size	12 bar
Fluid connection type	G 1/4 (female) conforming to ISO 228
Controlled fluid	Sea water (0...70 °C) Fresh water (0...70 °C) Air (0...70 °C)
Cable entry	2 entries tapped for Pg 13.5 cable gland conforming to NF C 68-300
Contacts type and composition	3 NC snap action
Product specific application	-
Pressure switch type of operation	Regulation between 2 thresholds
Electrical connection	Screw-clamp terminals, clamping capacity: minimum : 2 x 4 mm²
Electrical circuit type	Power circuit
Scale type	Adjustable differential
Local display	Without
Sale per indivisible quantity	1

Complementary

Adjustable range of switching point on falling pressure	0.3...10.3 bar
Adjustment range high setting	1.3...12 bar
Possible differential minimum at low setting	1 bar
Possible differential minimum at high setting	1.7 bar
Possible differential maximum at high setting	8.4 bar
Destruction pressure	30 bar
Type of decompression valve	Straight valve instant connection
Control type	ON/OFF knob
Terminal block type	6 terminals
Pressure actuator	Diaphragm
Materials in contact with fluid	Canvas covered nitrile Chromated zinc alloy
Enclosure material	PA impregnated with fibreglass
Operating position	Any position
Operating rate	10 cyc/mn
Repeat accuracy	< 3.5 %
[Ui] rated insulation voltage	500 V conforming to EN/IEC 60947-1
[Uimp] rated impulse withstand voltage	6 kV conforming to EN/IEC 60947-1
Resistance across terminals	<= 25 MOhm conforming to NF C 93-050 method A <= 25 MOhm conforming to IEC 60255-7 category 3

The information provided in this documentation contains general descriptions and/or technical characteristics of the performance of the products contained herein.
This documentation is not intended as a substitute for and is not to be used for determining suitability or reliability of these products for specific user applications.
It is the duty of any such user or integrator to perform the appropriate and complete risk analysis, evaluation and testing of the products with respect to the relevant specific application or use thereof.
Neither Schneider Electric Industries SAS nor any of its affiliates or subsidiaries shall be responsible or liable for misuse of the information contained herein.

Electrical durability	700000 cycles (2.2 kW, operating rate: 10 cyc/mn, load factor: 0.4, 400 V AC 3 phases) 600000 cycles (1.5 kW, operating rate: 10 cyc/mn, load factor: 0.4, 230 V AC 3 phases) 500000 cycles (3 kW, operating rate: 10 cyc/mn, load factor: 0.4, 400 V AC 3 phases) 1000000 cycles (1.5 kW, operating rate: 10 cyc/mn, load factor: 0.4, 400 V AC 3 phases)
Mechanical durability	1000000 cycles
Setting	Nut
Product weight	0.45 kg
Terminals description ISO n°1	(1-2)NC (3-4)NC (5-6)NC
Depth	98 mm
Height	138 mm
Width	57 mm

Environment

Standards	CE EN/IEC 60947-4-1
Ambient air temperature for operation	-25...70 °C
Ambient air temperature for storage	-40...70 °C
Vibration resistance	3 gn (f = 10...500 Hz) conforming to IEC 60068-2-6
Shock resistance	50 gn conforming to IEC 60068-2-27
Class of protection against electric shock	Class I conforming to IEC 60536
IP degree of protection	IP54 conforming to EN/IEC 60529

Offer Sustainability

Sustainable offer status	Green Premium product
RoHS	Compliant - since 0627 - Schneider Electric declaration of conformity
REACh	Reference not containing SVHC above the threshold
Product environmental profile	Available Download Product Environmental
Product end of life instructions	Need no specific recycling operations