Circuit Breakers for Equipment

T9



RoHS COMPLIANT 2002/95/EC Pb Lead-free

Product description

T9 is a single pole thermal circuit breaker / supplementary protector for general industrial use with cycling trip-free release in a compact housing. The attractive design offers snap-in mounting, quick connect terminals and push to reset operation.
Rated currents available from 4 A up to 16 A.

Typical applications are USP, power supplies, charging units, power tools, household appliances, electrical machines for leisure and hobby.

Tripping characteristics

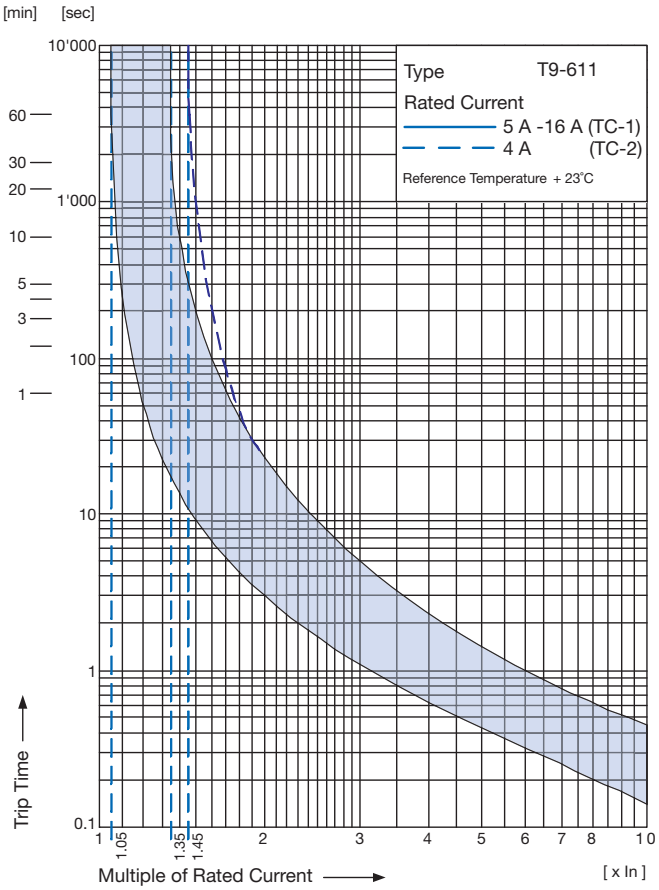

Effect of ambient temperature

The units are calibrated for an ambient temperature of +23°C. To determine the rated current for a lower or higher ambient temperature, use a correction factor from the table below:

Ambient temperature (°C)	Correction factor
- 5	0,85
+10	0,95
+23	1,00
+40	1,08
+60	1,21

Example

Rated current at +23°C	10,0 A
Ambient temperature	+60°C
Correction factor	1,21
Chosen rated current at +60°C ambient temperature	10,0 A x 1,21 = 12,1 A

Technical data

Rated voltage U_e	see approvals	AC 240 V, 50/60 Hz DC 48/32 V
Rated current I_n	see approvals	4 - 16 A
Conditional short circuit current	IEC: Inc, PC1, AC 240 V	2000 A
	CSA: SC, AC 240 V / DC 48/32 V	2000 A
Overload rating	according to CSA C22.2 235	OL0 240 VAC OL0 48 and 32 VDC
Degree of protection	Accessible range	IP 40
	Termination range	IP 00
Dielectric strength		AC 1500 V
Insulation resistance	DC 500 V	> 100 MΩ
Ambient temperature	5-16 A	-5°C to 60°C
	4 A	-5°C to 50°C
Type of actuation	Reset Type (manual)	R
Type of tripping		Cycling trip-free
Weight		9 g

Approvals

			Rated currents	Rated voltage AC	Rated voltage DC
c UL us	UL	UL 1077	4 - 8 A	240 V	48 V
			10 - 16 A	240 V	32 V
	UL	CSA C22.2 235	4 - 8 A	240 V	48 V
			10 - 16 A	240 V	32 V
	VDE	IEC 60934	4 - 12 A	240 V	48 V
			>12 - 16 A	240 V	32 V
	CQC	GB 17701	4 - 16 A	240 V	

Actual information about approvals can be found on: www.schurter.com/approvals

Order code

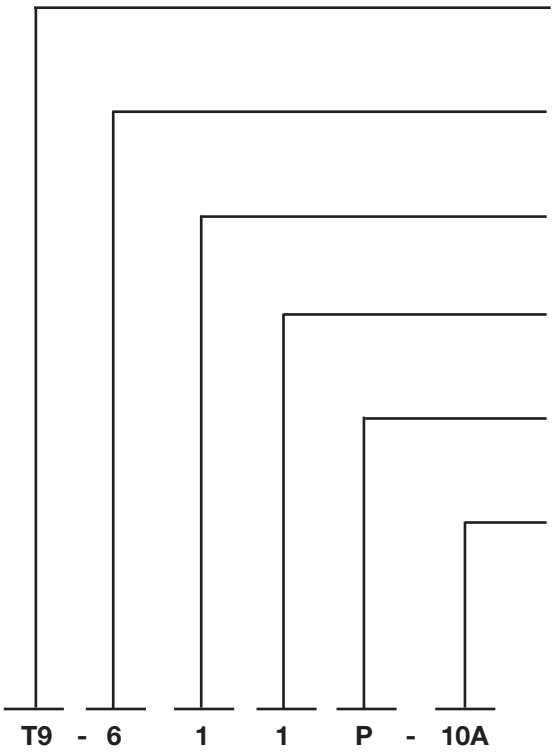

Basic type

T9 single pole, thermal overload switch, cycling trip-free

Mounting style

6 snap-in type for panel thickness 0.8...2.0 mm
recommended panel thickness: 0.8 / 1.2 / 1.6 / 2.0 mm

Actuation type

1 reset type (R-type)

Terminal type

1 6.3 x 0.8 mm quick connect terminals IEC 61210

Front printing

P rated current printed on front

Rated current

4 A	10 A
5 A	12 A
6 A	14 A
7 A	15 A
8 A	16 A

Dimensions

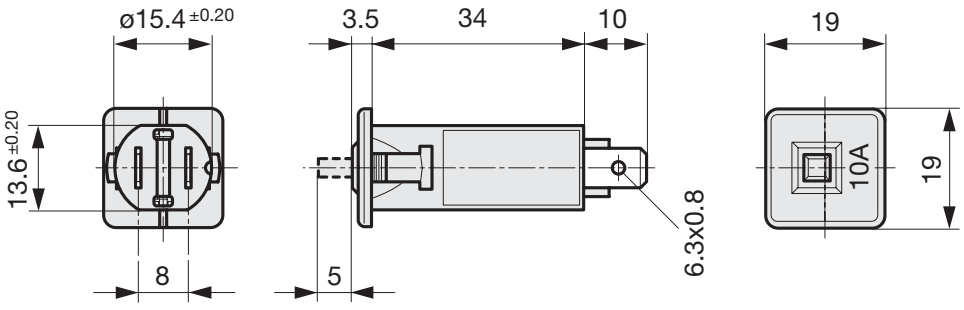

Mounting Holes

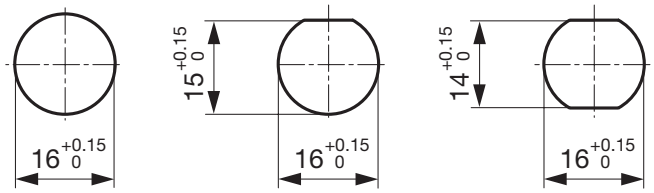

Panel thickness S= 0.8 - 2.0 mm Recommended panel thickness: 0.8 / 1.2 / 1.6 / 2.0 mm