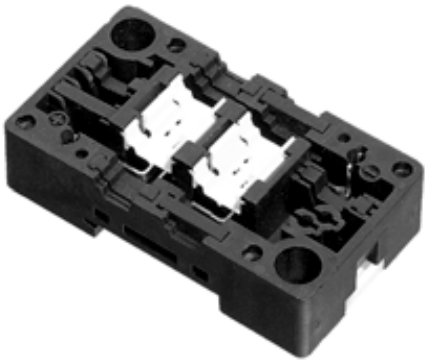

Model Number

U-G1F

AS-Interface module mounting base for connection to flat cable (AS-Interface)

Function

The U-G1F lower section makes it possible to connect slaves from the G1 and G4 series to the AS-Interface without an additional power supply (EMS). It features two connections to the AS-Interface which are linked together. In this way it can serve as a distributor from one AS-Interface arm to another. When an upper section (module or VAZ-DK-G1 cover) is mounted, the flat cables are pressed into the insulation penetration blades, thus creating a contact.

Accessories

VAZ-DK-G1
cover

Dimensions

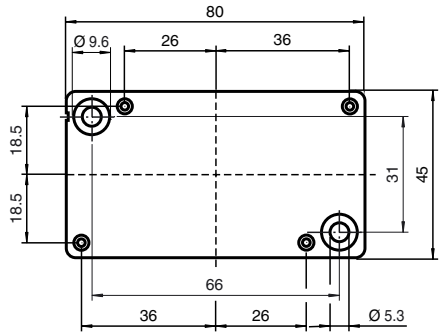

Electrical connection

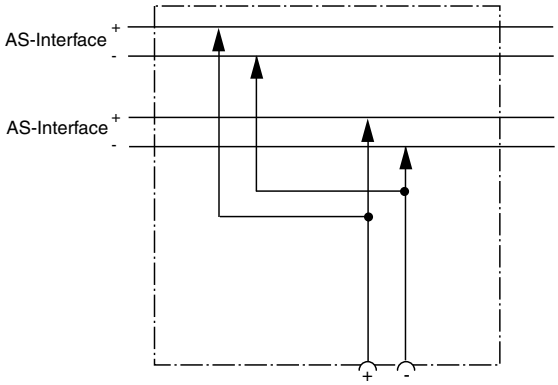

Contacts to module

Technical data

General specifications	
UL File Number	E223772
Electrical specifications	
Current loading capacity	≤ 2 A for max. 40 V
Ambient conditions	
Ambient temperature	-25 ... 60 °C (248 ... 333 K)
Storage temperature	-25 ... 85 °C (248 ... 358 K)
Mechanical specifications	
Protection degree	IP67 according to EN 60529 (only in connection with module or cover)
Connection	2 AS-Interface flat cables
Material	
Housing	PBT
Dimensions	about 80, 45, 20 mm (L, W, H)
Mounting	DIN rail or screw mounting

Release date: 2009-01-21 10:05 Date of issue: 2009-01-21 099334_ENG.xml

Subject to modifications without notice
Copyright Pepperl+Fuchs

Pepperl+Fuchs Group www.pepperl-fuchs.com
USA: +1 330 486 0001 fa-info@us.pepperl-fuchs.com
Germany: +49 621 776-4411 fa-info@pepperl-fuchs.com
Singapore: +65 6779 9091 fa-info@sg.pepperl-fuchs.com

PEPPERL+FUCHS SENSING YOUR NEEDS

VBA-4E-G4-Pt100
AS-Interface analogue module

VAZ-T4-G1
AS-Interface splitter box

VAA-4A-G1-R
AS-Interface actuator module

VAA-4E-G4-ZE
AS-Interface sensor module

VBA-4E-G4-ZE
AS-Interface sensor module

VAA-LT2-G1
AS-Interface pushbutton module

VBA-LT2-G1-Y
AS-Interface luminous push-button module

VBA-LT2-G1
AS-Interface luminous push-button module

VAA-4E-G4-Z
AS-Interface sensor module

VAA-2*2E-G1-AE
AS-Interface sensor module

VAA-4E-G1-ZE
AS-Interface sensor module

VAA-4E-G4-ZE0
AS-Interface sensor module

VAA-4E-G4-N
AS-Interface sensor module

VAA-2EA-G1-ZE/P-S
AS-Interface pneumatic module

VAA-4E2A-G1-ZE/P-S
AS-Interface pneumatic module

VBA-4E2A-G1-ZE/P-S
AS-Interface pneumatic module

VAA-2E-G4-SN
AS-Interface safety module

VAA-2EA-G1-ZE/P-V2A
AS-Interface pneumatic module

Release date: 2009-01-21 10:05 Date of issue: 2009-01-21 099334_ENG.xml

Subject to modifications without notice
Copyright Pepperl+Fuchs
Pepperl+Fuchs Group
www.pepperl-fuchs.com
USA: +1 330 486 0001
fa-info@us.pepperl-fuchs.com
Germany: +49 621 776-4411
fa-info@pepperl-fuchs.com
Singapore: +65 6779 9091
fa-info@sg.pepperl-fuchs.com
PEPPERL+FUCHS
SENSING YOUR NEEDS