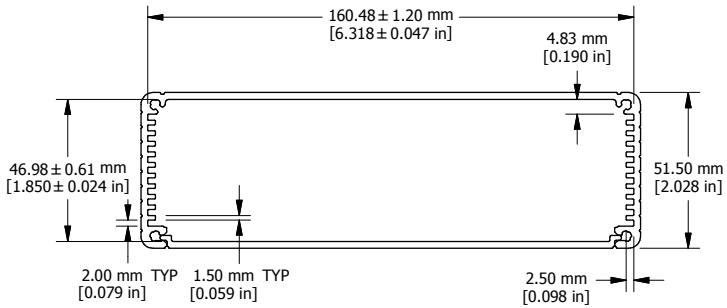


EXTRUSION

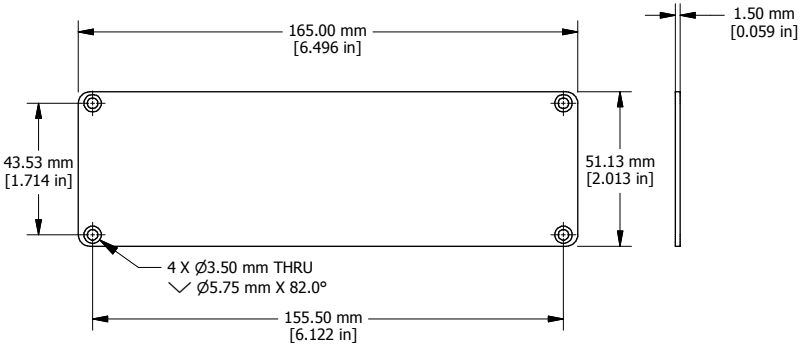


END PLATE

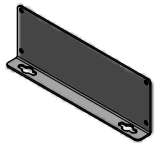

OPTIONAL FLANGE
END PANELS 1455TF

EXTRUSION DESIGNED FOR 160MM WIDE P BOARD

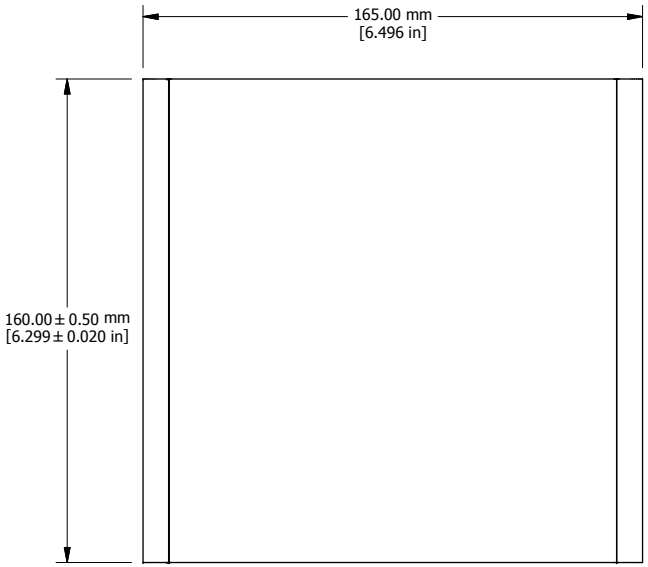


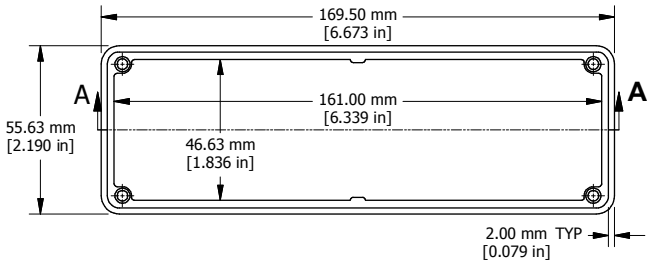


OPEN BEZEL

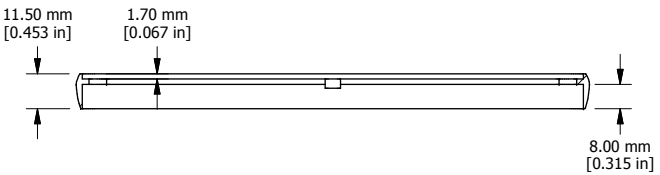


SECTION A-A

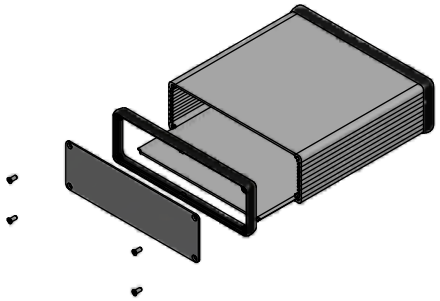

EXPLODED ASSEMBLY VIEW

Enclosures can be Factory Modified ( Milling, Drilling, Printing etc. )
Solid models of this enclosure available in STEP or IGES.
Contact Factory mjm@hammondmfg.com

| NOTE |
|---|
| Purchased assembly includes box, plastic bezels, end panels, #6 Taptight screws and self adhesive rubber feet. |
| Box made from Extruded Aluminum 6063. |
| Bezels made with polycarbonate. |

| 1455T1601 | |
|---|---|
| **PART NUMBERS** | |
| Clear Anodized | 1455T1601 |
| Black Anodized | 1455T1601BK |
| Blue Anodized | 1455T1601BU |
| Red Anodized | 1455T1601RD |
| **ACCESSORIES** | |
| See website for accessories. | |

HAMMOND MANUFACTURING™

1455T1601

www.hammondmfg.com