SC 110

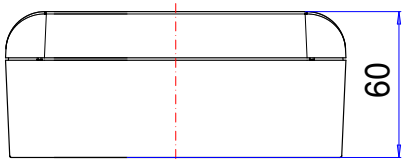

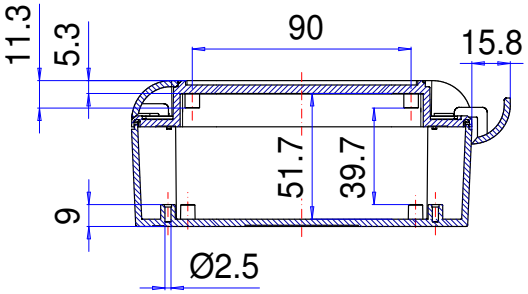

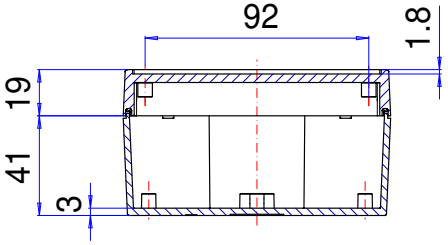

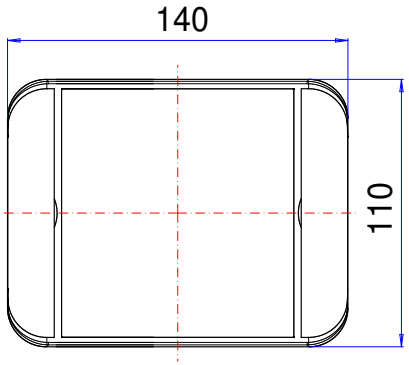

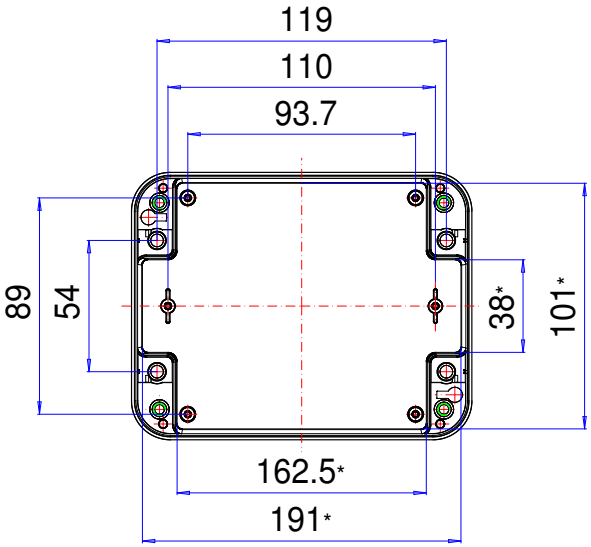

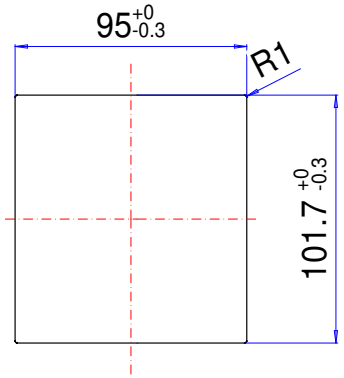

Folientastatur
Membrane keyboard