# E20843

## Mounting set for position sensors

CLAMP OF FREESTANDING

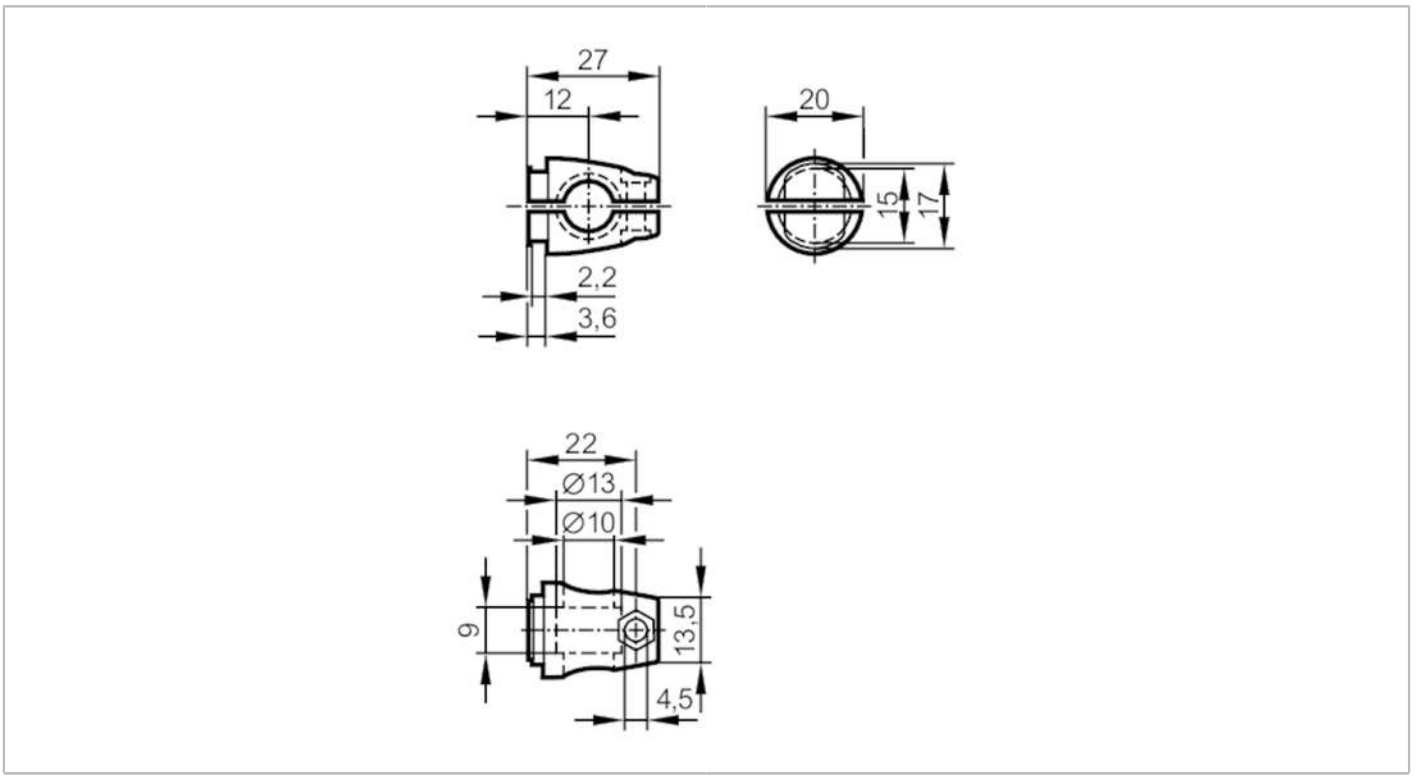


| | | |
|---|---|---|
| **Mechanical data** | | |
| Weight | [g] | 87 |
| Type of mounting | | free-standing;  (M8) |
| Dimensions | [mm] | M8 |
| Thread designation | | M8 |
| Materials | | Clamp: diecast zinc |
| **Accessories** | | |
| Items supplied | | head cap screw: 1 x M8 x 80 |
| | | washers: 2 |
| | | hexagon nuts: 2 |
| **Remarks** | | |
| Pack quantity | | 1 pcs. |