DATASHEET - M22-FK10



Contact element, Cage Clamp, Push-in, Front fixing, 1 N/O, 24 V 1.5 A, 230 V 1.5 A

Part no.	**M22-FK10**
Catalog No.	**180792**
Alternate Catalog No.	**M22-FK10**
EL-Nummer (Norway)	**4315743**

Delivery program

Basic function accessories			Contact elements
Description			Cage Clamp is a registered trademark of Wago Kontakttechnik GmbH/Minden, Germany
Connection technique			Cage Clamp, Push-in
Fixing			Front fixing
Degree of Protection			IP20
Connection to SmartWire-DT			no
Approval			DGUV Test ET 16107 Sicherheit geprüft tested safety
Contacts			
N/O = Normally open			1 N/O
Contact sequence			
Contact travel diagram, stroke in connection with front element			
Contact diagram			
Connection technique			Cage Clamp, Push-in

Technical data

General

Standards			IEC 60947-5-1
Lifespan, mechanical	Operations	x 10^6	> 1

Operating frequency	Operations/h		≦ 3600
Actuating force		n	≦ 4.5
Degree of Protection			IP20
Climatic proofing			Damp heat, constant, to IEC 60068-2-78 Damp heat, cyclic, to IEC 60068-2-30 Dry heat to IEC 60068-2-2
Ambient temperature			
Open		°C	-25 - +70
Storage		°C	- 40 - + 85
Mechanical shock resistance to IEC 60068-2-27 Shock duration 11 ms, half-sinusoidal		g	> 50
Terminal capacities		mm^2	
Solid		mm^2	2 x 1 (0.2 - 1.5) 2 x 1 (075 - 1.5) Can be plugged without tools
Flexible with ferrule		mm^2	2 x 1 (0.25 - 1) Use WAGO Variocrimp 4 crimping tool; please enquire for others
Solid or stranded		AWG	2 x 1 (24 - 16)

Contacts

Rated impulse withstand voltage	U_{imp}	V AC	4000
Rated insulation voltage	U_i	V	250
Overvoltage category/pollution degree			III/3
Max. short-circuit protective device			
Fuseless		Type	FAZ-B4
Fuse	gG/gL	A	4

Switching capacity

Rated operational current	I_e	A	
AC-15			
24 V	I_e	A	4
60 V	I_e	A	4
110 V	I_e	A	2
230 V	I_e	A	1.5
DC-13			
24 V	I_e	A	1.5
60 V	I_e	A	0.8
110 V	I_e	A	0.4
220 V	I_e	A	0.2

Design verification as per IEC/EN 61439

Technical data for design verification			
Operating ambient temperature min.		°C	-25
Operating ambient temperature max.		°C	70

Technical data ETIM 7.0

Low-voltage industrial components (EG000017) / Auxiliary contact block (EC000041)

Electric engineering, automation, process control engineering / Low-voltage switch technology / Component for low-voltage switching technology / Auxiliary switch block (ecl@ss10.0.1-27-37-13-02 [AKN342013])

Number of contacts as change-over contact			0
Number of contacts as normally open contact			1
Number of contacts as normally closed contact			0
Number of fault-signal switches			0
Rated operation current Ie at AC-15, 230 V		A	1.5
Type of electric connection			Spring clamp connection
Model			Top mounting
Mounting method			Front fastening
Lamp holder			None

Approvals

Product Standards	IEC/EN 60947-5; UL 508; CSA-C22.2 No. 14-05; CSA-C22.2 No. 94-91; CE marking
UL File No.	E29184
UL Category Control No.	NKCR
CSA File No.	012528
CSA Class No.	3211-03
North America Certification	UL listed, CSA certified
Degree of Protection	UL/CSA Type: -

Dimensions

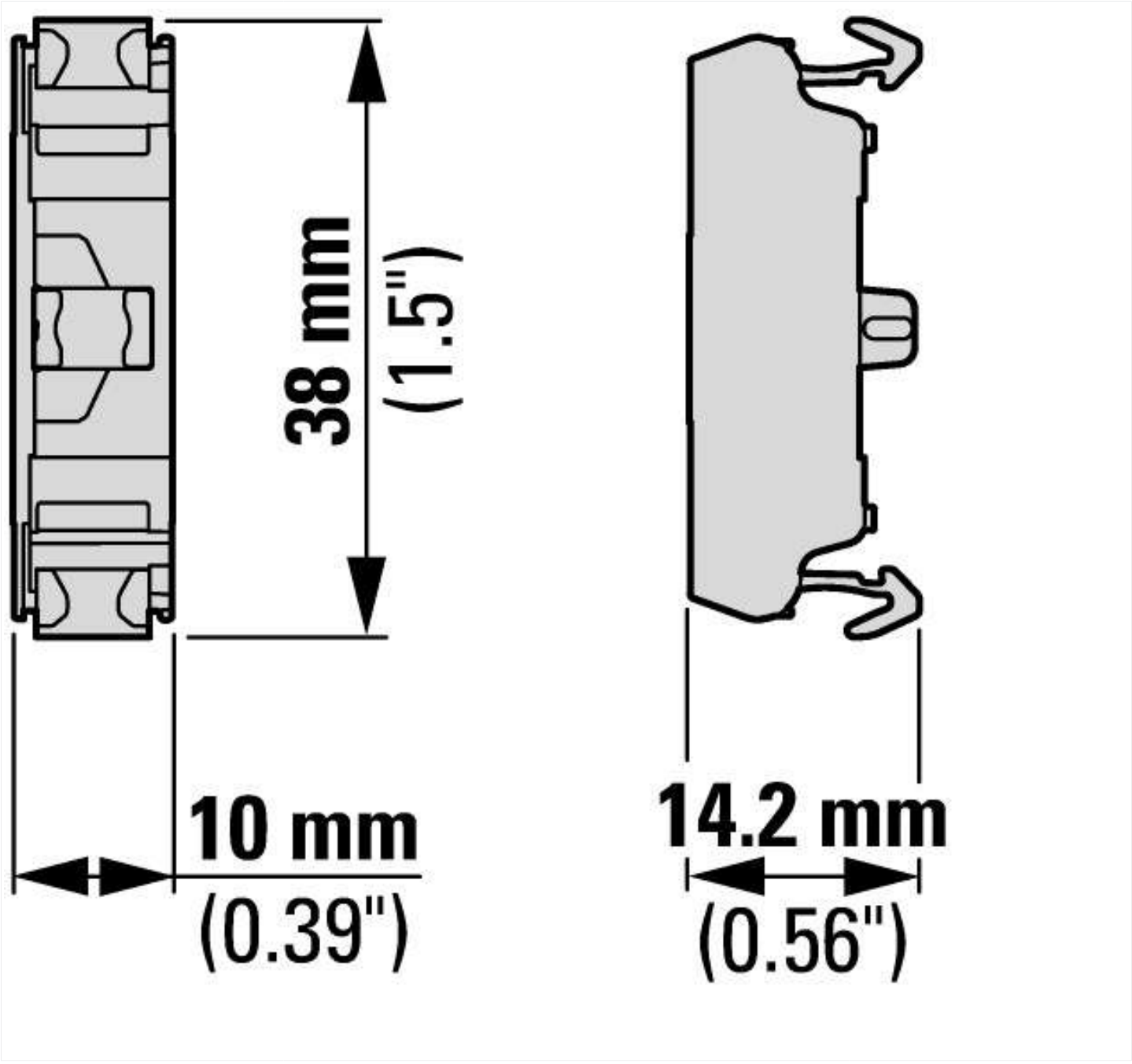

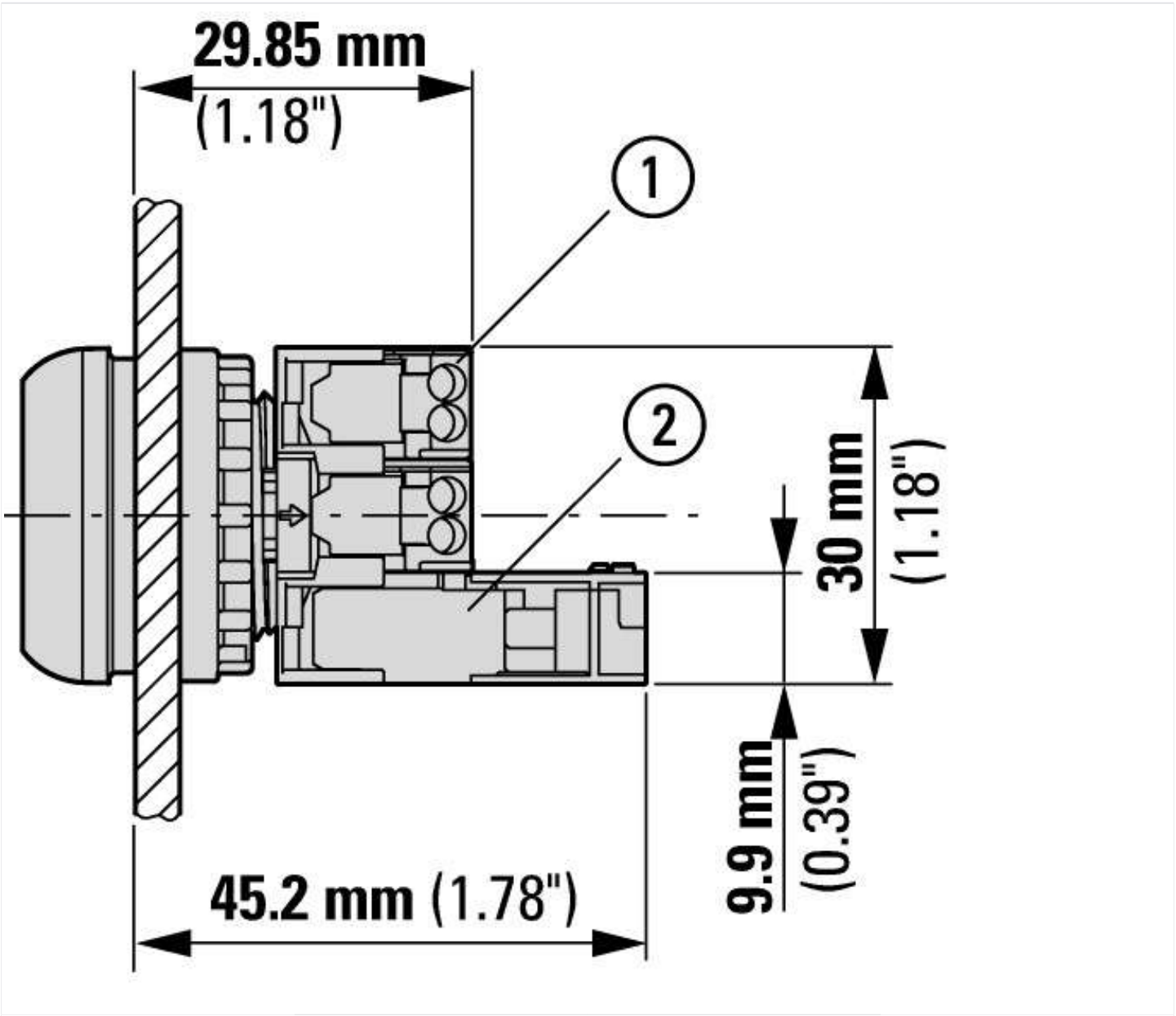

① M22-FK10(01)
② M22-(C)K...

© 05/2021 by Eaton Industries GmbH