SCHAEFFLER

Angular contact ball bearings

7008-B-XL-2RS-TVP (Series 70..-B-2RS)

contact angle α = 40°, lip seals on both sides

The datasheet is only an overview of dimensions and basic load ratings of the selected product. Please always observe all the guidelines in these overview pages. Further information is given on many products under the menu item "Description". You can also order comprehensive information via the Catalogue selection system (https://www.schaeffler.de/content.schaeffler.de/en/news_media/index.jsp) or by telephone on +49 (91 32) 82 - 28 97.

d	40	mm
D	68	mm
B	15	mm
a	30	mm
D_1	58,8	mm
D_2	59,4	mm
d_2	48,3	mm
D_3	65	mm
$D_{a\ max}$	63,4	mm
$d_{a\ min}$	44,6	mm
$D_{b\ max}$	64,8	mm
$r_{1\ min}$	0,6	mm

$r_{a1\ max}$	0,6 mm	
$r_{a\ max}$	1 mm	
r_{min}	1 mm	
α	40 °	Contact angle

m	0,17 kg	Mass
C_r	28000 N	Basic dynamic load rating, radial
C_{0r}	20300 N	Basic static load rating, radial
C_{ur}	1410 N	Fatigue limit load, radial
n_G	5200 1/min	Limiting speed

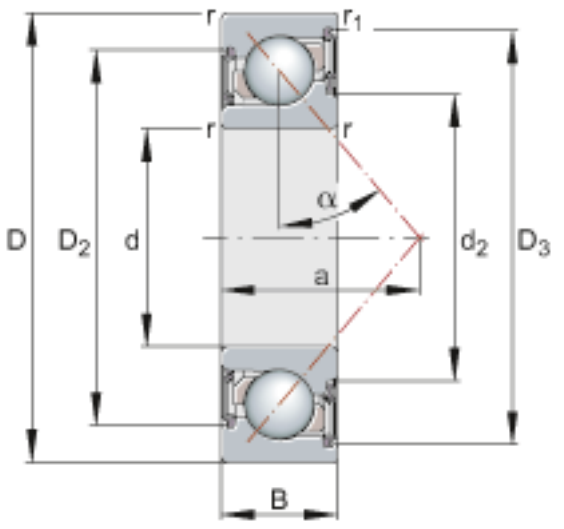

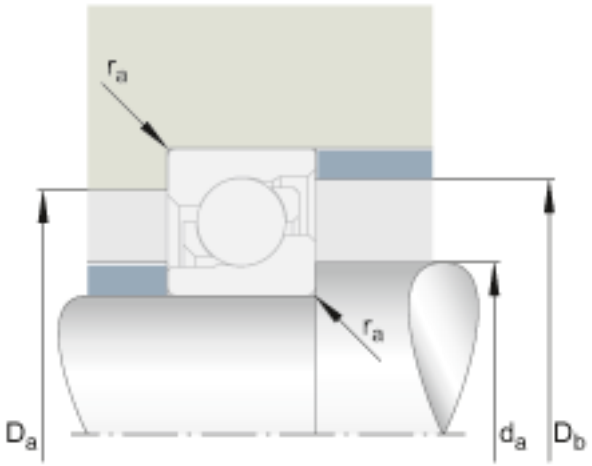
r_a
r_a
D_a
d_a
D_b

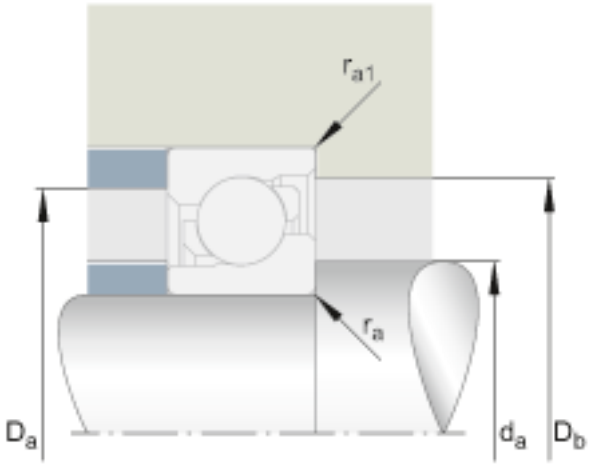
r_{a1}
r_a
D_a
d_a
D_b