Your Expert Partner for **Human Machine Interfaces**

Actuator

Distribution by
Rs-online

14-
433.036



https://rs-online.eao.com/component/14-433.03...

Your product:



14-433.036
Actuator

FRONT

Front form:	Round

MOUNTING

Mounting type:	Panel mounting

OPERATING-/INDICATION PART

Lens illumination:	Illuminated

ELECTRICAL CHARACTERISTICS

Switching voltage and switching current:	100 mA at 42 VAC/VDC
Contacts:	1 NC / 1 NO
Switching rating:	42 V @ 0,1 A
Electric strength:	3000 VAC, 50 Hz, 1 min. between all terminals and earth, according to EN/IEC 61058-1
Protection class:	II

MECHANICAL CHARACTERISTICS

Terminal:	Universal terminal, 2 x 0.5 mm
Contact material:	Gold
Switching action:	Momentary
Switching system:	Low-level element
Switching system:	This low-level switching element was designed for switching low powers in electronic circuits. The mechanism assures reliable switching of loads ranging from a few µA/µV up to 100 mA/ 42 VAC/DC.

Single-break momentary contact, as normally open or normally closed with 4 independent points of contact. 2 momentary contactsper switching element; combination of normally open and normally closed is possible.
Special features are the long life, extremely short rebound time and stable contact resistance.

Mechanical lifetime:	5 Mil. cycles of operation
Operating force:	3 N ... 4 N, depending on the number of switching elements
Operating Travel:	3 mm
Tightening torque:	Fixing nut max. 0.25 Nm
Terminal details 1:	The universal terminals permit these units to be mounted on printed circuit boards (PCB). These terminals can also be used as soldering or plug-in terminals. For these terminals we can also supply a plug-in base which, when soldered on to the board, enables the switch to be plugged in.
Wire cross section:	Max. wire diameter 2 wires of 1 mm Max. wire cross-section of stranded cable 2 x 0.75 mm^2
Weight:	0.016 kg

AMBIENT CONDITION

IP front protection:	IP67, according to DIN EN 60529
Operating temperature:	– 25 °C ... + 55 °C, mounted as a block, make sure the heat can escape freely
Storage temperature:	– 40 °C ... + 85 °C
Shock resistance:	Max. 150 m / s^2, pulse width 11 ms, 3-axis, (semi-sinusoidal as per EN IEC 60068-2-27)

CERTIFICATE

Conformities:	2011 / 65 / EC (RoHS), 2014 / 35 / EU (LVD)
REACH:	REACH compliant
RoHS:	RoHS compliant

OTHER

Short Description:	Actuator, Illuminated, Round, 1 NC / 1 NO, Momentary, Universal terminal, 2 x 0.5 mm, IP67, according to DIN EN 60529
Housing colour:	Black
Wiring diagrams:	

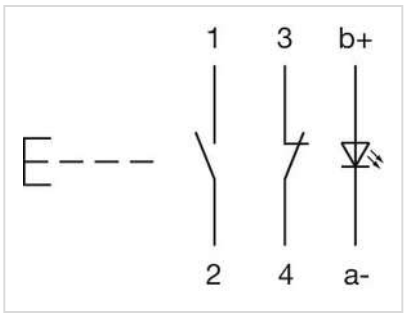

Component layouts:

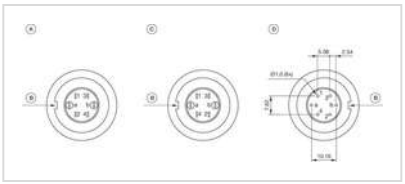

A = Terminals (rear side)
B = Anti twist device
C = Diode block
D = Drilling plan (component side)

Mounting cut-outs:

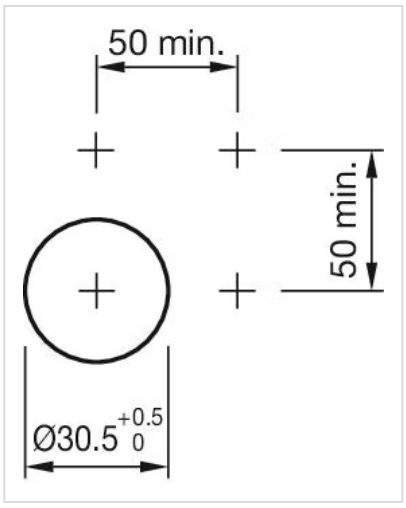
50 min.
50 min.
Ø30.5 +0.5 0

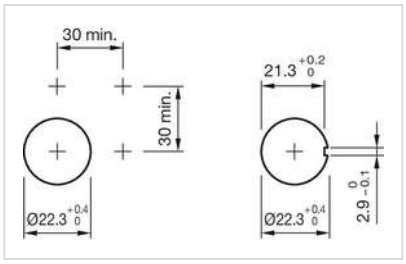
30 min.
30 min.
Ø22.3 +0.4 0
21.3 +0.2 0
2.9 0 -0.1
Ø22.3 +0.4 0

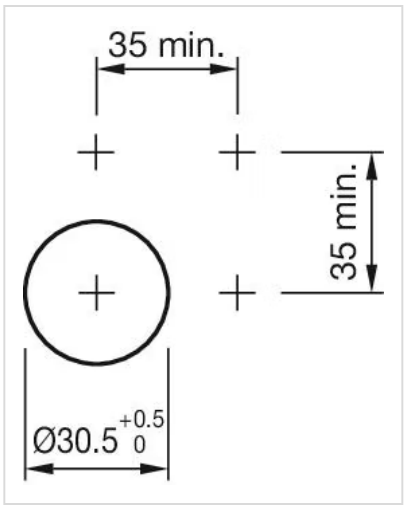
35 min.
35 min.
Ø30.5 +0.5 0

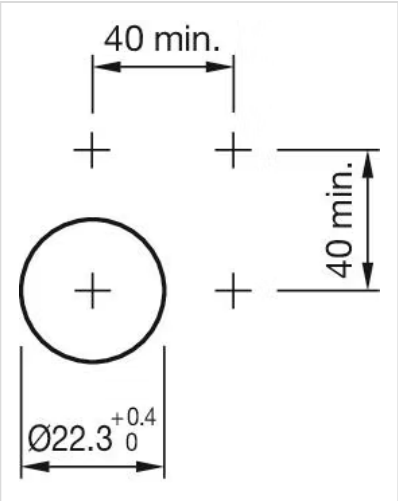

Dimension drawings:

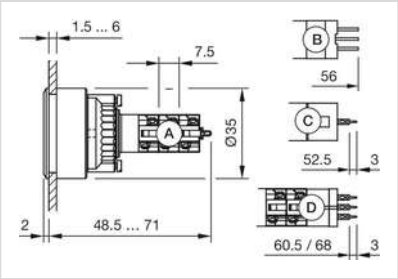

A = Solder terminal
B = Plug-in terminal 2.8 x 0.5 mm
C = Universal terminal 2.0 mm x 0.5 mm
Universal-Solder terminal

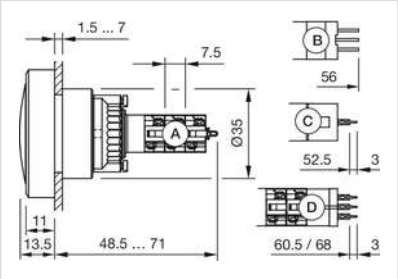

A = Solder terminal
B = Plug-in terminal 2.8 x 0.5 mm
C = Universal terminal 2.0 mm x 0.5 mm
D = Universal-Solder terminal

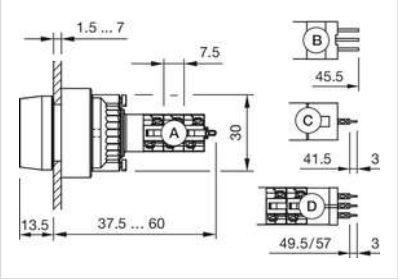

A = Solder terminal
B = Plug-in terminal 2.8 x 0.5 mm
C = Universal terminal 2.0 mm x 0.5 mm
D = Universal-Solder terminal

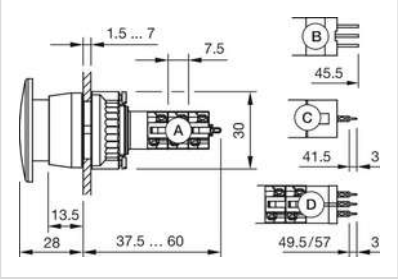

A = Solder terminal
B = Plug-in terminal 2.8 x 0.5 mm
C = Universal terminal 2.0 mm x 0.5 mm
D = Universal-Solder terminal

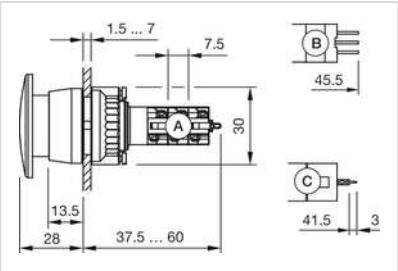

A = Solder terminal
B = Plug-in terminal 2.8 x 0.5 mm
C = Universal terminal 2.0 mm x 0.5 mm