BFD80T4E024

FOUR-POLE CONTACTOR, 80A/1000V DC1, AC/DC COIL, 20-48VAC/DC



Product designation			Power contactor
Product type designation			BFD80
Contact characteristics			
Number of poles		Nr.	4
Rated insulation voltage Ui IEC/EN		V	1000
Rated impulse withstand voltage Uimp		kV	8
Operational frequency			
	min	Hz	25
	max	Hz	400
IEC Conventional free air thermal current Ith		A	115
IEC max current Ie in DC1 with L/R ≤ 1ms with 4 poles in series			
	400V	A	115
	600V	A	100
	800V	A	90
	1000V	A	80
Short-time allowable current for 10s (IEC/EN60947-1)		A	640
Protection fuse			
	gG (IEC)	A	125
	aM (IEC)	A	80
Resistance per pole (average value)		mΩ	0.6
Power dissipation per pole (average value)			
	Ith	W	7.9
Tightening torque for terminals			
	min	Nm	4
	max	Nm	5
	min	lbin	2.95
	max	lbin	3.69
Tightening torque for coil terminal			
	min	Nm	0.8
	max	Nm	1
	min	lbin	0.59
	max	lbin	0.74
Max number of wires simultaneously connectable		Nr.	2
Conductor section			
AWG/Kcmil			
	max		2
Flexible w/o lug conductor section			
	min	mm²	1.5
	max	mm²	35
Flexible c/w lug conductor section			
	min	mm²	1.5
	max	mm²	35
Power terminal protection according to IEC/EN 60529			IP20 front
Mechanical features			
Operating position			

The characteristics described in this document are subject to updates or modifications at any time. The descriptions, technical and functional information, illustrations and instructions in this brochure are purely illustrative, and are consequently not contractually binding

		normal allowable		Vertical plan ±30°
Fixing				Screw / DIN rail 35mm
Weight			g	1280
Conductor section				
	AWG/kcmil conductor section			
		max		2
Operations				
Mechanical life			cycles	15000000
Safety related data				
Performance level B10d according to EN/ISO 13489-1				
		mechanical load	cycles	15000000
EMC compatibility				yes
AC coil operating				
Rated AC voltage at 50/60Hz, 60Hz				
		min	V	20
		max	V	48
Rated AC voltage at 50/60Hz			V	24
AC operating voltage				
	of 50/60Hz coil powered at 50Hz			
	pick-up			
		min	%Us	80 Us min
		max	%Us	110 Us max
	drop-out			
		max	%Us	≤70 Us min
	of 50/60Hz coil powered at 60Hz			
	pick-up			
		min	%Us	80 Us min
		max	%Us	110 Us max
	drop-out			
		max	%Us	≤70 Us min
AC average coil consumption at 20°C				
	of 50/60Hz coil powered at 50Hz			
		in-rush	VA	35…120
		holding	VA	1.5…3.7
	of 50/60Hz coil powered at 60Hz			
		in-rush	VA	35…120
		holding	VA	1.5…3.7
	of 60Hz coil powered at 60Hz			
		in-rush	VA	210
		holding	VA	15
Dissipation at holding ≤20°C 50Hz			W	1…2.5
DC coil operating				
DC rated control voltage				
		min	V	20
		max	V	48
DC rated control voltage			V	24
DC operating voltage				
	pick-up			
		min	%Us	85 Us min
		max	%Us	110 Us max
	drop-out			

The characteristics described in this document are subject to updates or modifications at any time. The descriptions, technical and functional information, illustrations and instructions in this brochure are purely illustrative, and are consequently not contractually binding

				max	%Us	≤70 Us min
Average coil consumption ≤20°C						
				in-rush	W	23…68
				holding	W	1.2…1.9
Max cycles frequency						
Mechanical operation					cycles/h	1500
Operating times						
Average time for Us control						
	in AC					
		Closing NO				
				min	ms	40
				max	ms	85
		Opening NO				
				min	ms	20
				max	ms	55
	in DC					
		Closing NO				
				min	ms	40
				max	ms	85
		Opening NO				
				min	ms	20
				max	ms	55
UL technical data						
General USE						
	Contactor					
				AC current	A	115
	4 poles in series DC1					
				600V	A	100
Ambient conditions						
Temperature						
	Operating temperature					
				min	°C	-40
				max	°C	70
	Storage temperature					
				min	°C	-50
				max	°C	80
Max altitude					m	3000
Resistance & Protection						
Pollution degree						3
Dimensions						

The characteristics described in this document are subject to updates or modifications at any time. The descriptions, technical and functional information, illustrations and instructions in this brochure are purely illustrative, and are consequently not contractually binding

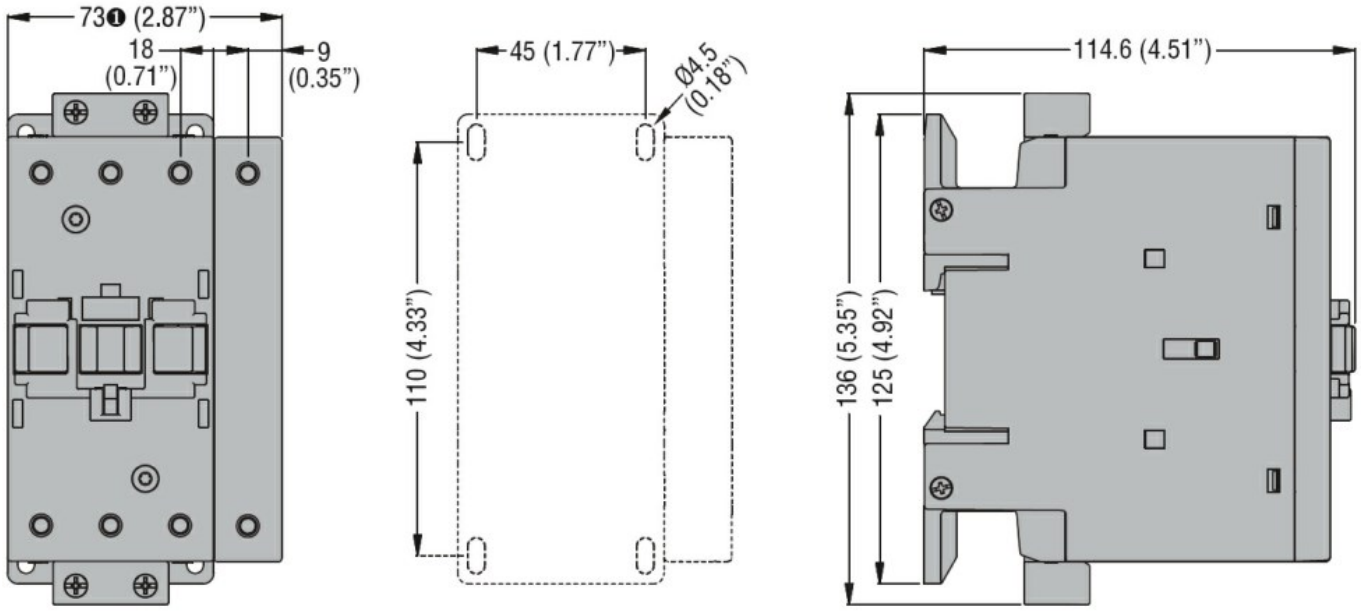

❶ BF80T2 82mm/3.23"

Wiring diagrams

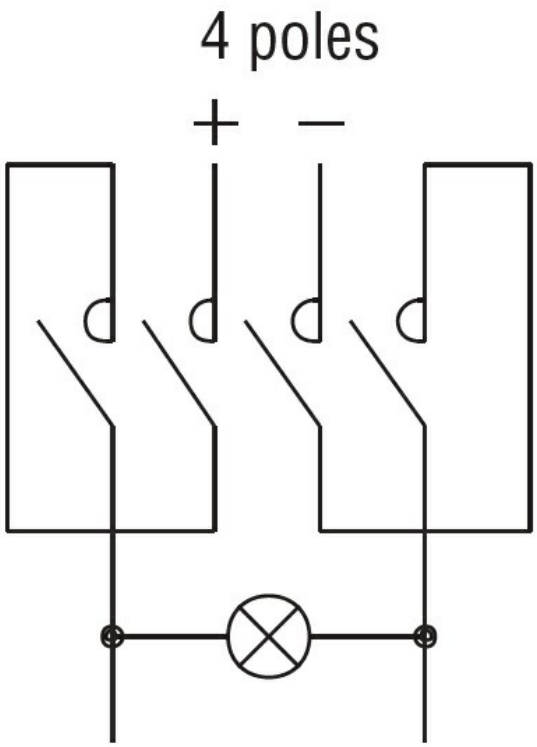

Certifications and compliance

Compliance

CSA C22.2 n° 60947-1
CSA C22.2 n° 60947-4-1
IEC/EN/BS 60947-1
IEC/EN/BS 60947-4-1
UL 60947-1
UL 60947-4-1

The characteristics described in this document are subject to updates or modifications at any time. The descriptions, technical and functional information, illustrations and instructions in this brochure are purely illustrative, and are consequently not contractually binding

Certificates

cULus

ETIM classification

ETIM 8.0	EC002552 - Power contactor, DC switching

The characteristics described in this document are subject to updates or modifications at any time. The descriptions, technical and functional information, illustrations and instructions in this brochure are purely illustrative, and are consequently not contractually binding