# IF5792

## Inductive sensor

IFB2002-ARKG/UP/US-100-IRS RT

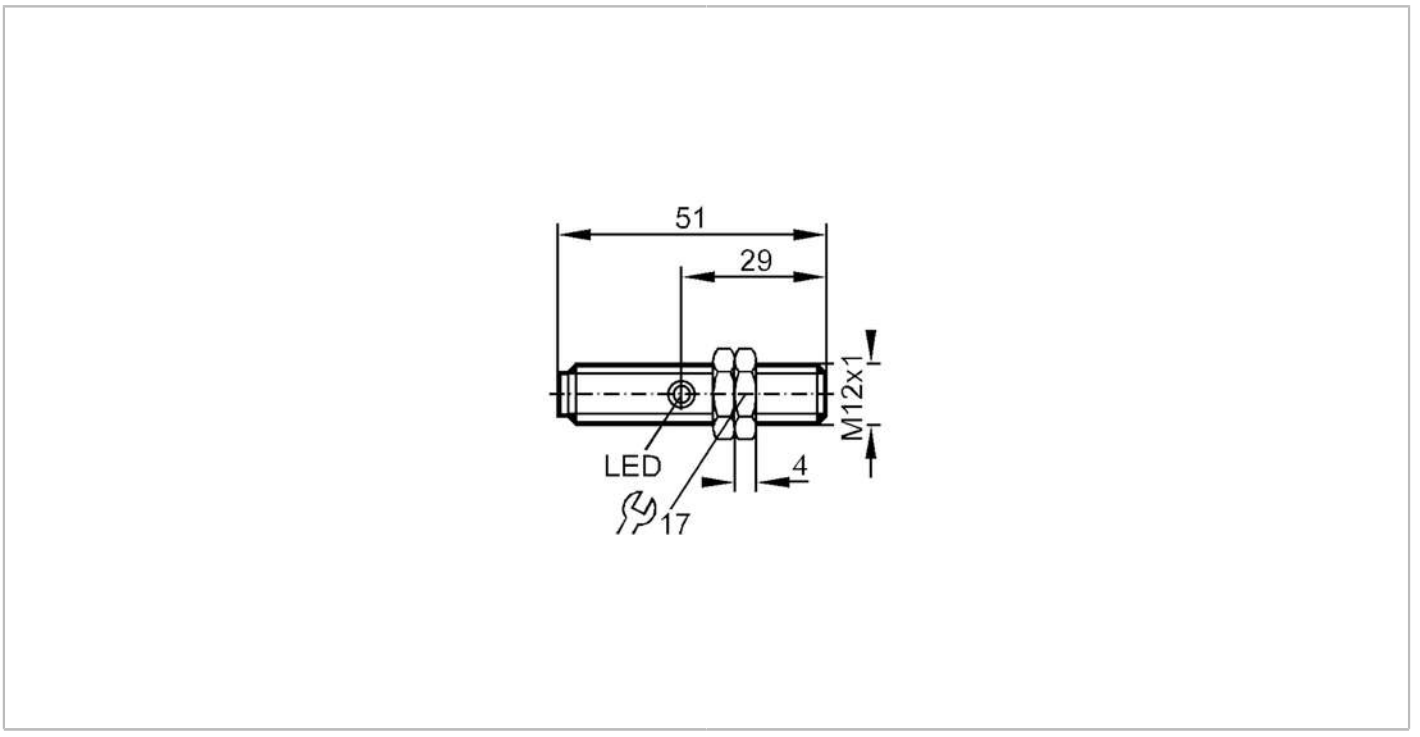


| | | |
|---|---|---|
| **Product characteristics** | | |
| Electrical design | | PNP/NPN |
| Output function | | normally open |
| Sensing range | [mm] | 2 |
| Housing | | threaded type |
| Dimensions | [mm] | M12 x 1 |
| **Electrical data** | | |
| Operating voltage | [V] | 10...36 DC |
| Protection class | | II |
| Reverse polarity protection | | yes |
| **Outputs** | | |
| Electrical design | | PNP/NPN |
| Output function | | normally open |
| Max. voltage drop switching output DC | [V] | 4.6 |
| Minimum load current | [mA] | 4 |
| Max. leakage current | [mA] | 0.6 |
| Permanent current rating of switching output DC | [mA] | 150 |
| Switching frequency DC | [Hz] | 1200 |
| Short-circuit protection | | yes |
| Type of short-circuit protection | | pulsed |
| Overload protection | | yes |

# IF5792

## Inductive sensor

IFB2002-ARKG/UP/US-100-IRS RT

| | | | |
|---|---|---|---|
| **Detection zone** | | | |
| Sensing range | [mm] | 2 | |
| Real sensing range Sr | [mm] | 2 ± 10 % | |
| Operating distance | [mm] | 0...1.6 | |
| **Accuracy / deviations** | | | |
| Correction factor | | steel: 1 / stainless steel: 0.7 / brass: 0.4 / aluminium: 0.3 / copper: 0.05 | |
| Hysteresis | [% of Sr] | 1...15 | |
| Switch point drift | [% of Sr] | -10...10 | |
| **Operating conditions** | | | |
| Ambient temperature | [°C] | -25...80 | |
| Protection | | IP 65 | |
| **Tests / approvals** | | | |
| EMC | | EN 60947-5-2 | |
| | | EN 55011 | class B |
| MTTF | [years] | 2744 | |
| **Mechanical data** | | | |
| Weight | [g] | 38.8 | |
| Housing | | threaded type | |
| Mounting | | flush mountable | |
| Dimensions | [mm] | M12 x 1 | |
| Thread designation | | M12 x 1 | |
| Materials | | brass nickel-plated; PC | |
| **Displays / operating elements** | | | |
| Display | | switching status | 1 x LED, red |
| **Accessories** | | | |
| Items supplied | | lock nuts: 2 | |
| **Remarks** | | | |
| Pack quantity | | 1 pcs. | |

**Electrical connection - plug**

Connector: 1 x M12; coding: A



# IF5792

## Inductive sensor

**IFB2002-ARKG/UP/US-100-IRS  RT**

## Connection

