Pegler Valve

Hose union FGK Bibtap with double check valve, ferrule guard and key, DZR metal.

142HU FGK Bibtap



General Information

Size	Pattern No.	Pack 1 Qty	Pack 2 Qty	Code	Barcode	Price (£) each ex VAT
1/2"	142HU FGK	1	5	508117	5022050546364	£65.98

142HU FGK Bibtap

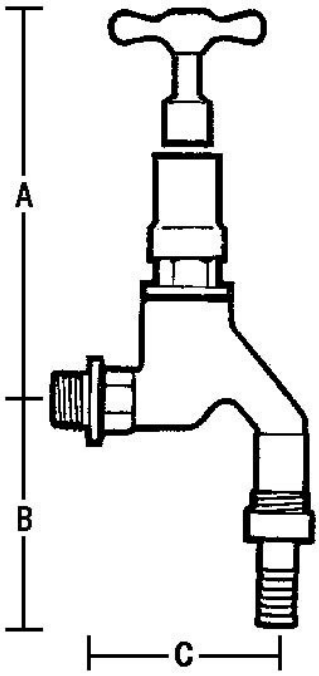

Dimensions

Code	Description	A	B	C
508117	1/2 142HU FGK DZR HU BIBTAP CW DCV/FGK	96	76	65

0.49

Pegler Yorkshire reserve the right to change specifications

Guarantee

Valves and Fittings

Pegler Customcare 5 Year Guarantee - Terms and Conditions

Products are subject to a 5 year guarantee that is between Pegler and the final purchaser of the product.

The guarantee is subject to proof of purchase being supplied.

This guarantee does not affect any statutory rights the consumer may have in law.

The guarantee covers manufacturing or material defects and does not cover parts subject to normal wear and tear.

This product range has been designed for the use of homeowners, domestic and commercial applications and therefore the guarantee is subject to the product being properly selected for their intended service conditions.

The guarantee is not applicable where the product is fitted contrary to the conditions in the fitting instructions.

This is reinforced where valves are covered by the European Pressure Equipment Directive (PED97/23/EC) where Installation, Operating and Maintenance Instructions are supplied with each product and/or carton.

Provided it is installed correctly and receives adequate preventative maintenance it should give years of

trouble –free service.

Abusive behaviour and accidental damage to the product are not covered by this guarantee.

The extent of this liability is limited to the cost of the replacement of the defective item and not to fitting or consequential damages.

Pressure and Temperature

Description	Minimum Operating Pressure (bar)	Maximum Cold Working Pressure (bar)	Maximum Hot Working Pressure (bar)
142HU FGK Bib tap	No Minimum Operating Pressure	10.0 bar at temperatures up to 90oC	Not Suitable for Maximum Hot Working Pressure

Care and Maintenance

Care
No regular aesthetic care is required for this product

Maintenance
No regular maintenance is required for this product.

For any further help please contact the Service Support Team on: 0800 1560050.

Regulations

Regulations
It is important to ensure that the water supplies to your fittings are connected in accordance with the water regulations (WRAS) requirements and good plumbing practice.
This product has been designed in accordance with BS1010 standard.

Materials

Component	Material
Body	Forged Brass
Backnut	Forged Brass
Anti-rotational washer	Polyethelene
Head	Brass Bar
Spindle	Brass Bar
Handle	Forged Brass
Valve	Brass Bar
Gland	Brass Bar
Packing	Plastic
Seals	Rubber

142HU FGK Bibtap

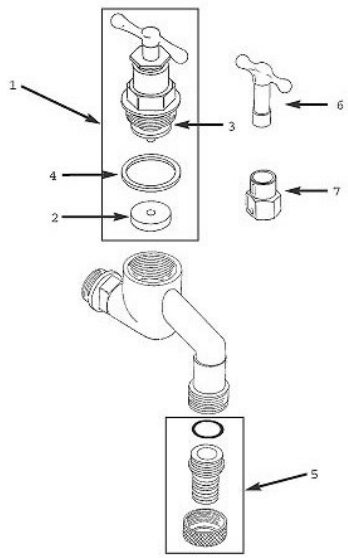

Spare Key	Description	Code	Barcode	Date From	Date To	Price (£) ex VAT
			1			
1	HK1 COMPLETE HEADWORK (DZR) 1/2	814177	5013866056819	01/01/1900	To Current	£0.00

Spare Key	Description	Code	Barcode	Date From	Date To	Price (£) ex VAT
			2			
2	VW17 VALVE WASHER	811209	5013866054181	01/01/1900	To Current	£0.00

Spare Key	Description	Code	Barcode	Date From	Date To	Price (£) ex VAT
			3			
3	VWA5 VALVE WASHER ASSEMBLY	814120	5013866056567	01/01/1900	06/09/2018	£0.00

Spare Key	Description	Code	Barcode	Date From	Date To	Price (£) ex VAT
			4			
4	SW3 HEAD / BODY WASHER	814133	5013866056673	01/01/1900	06/09/2018	£0.00

Spare Key	Description	Code	Barcode	Date From	Date To	Price (£) ex VAT

Spare Key	Description	Code	Barcode	Date From	Date To	Price (£) ex VAT
			5			
5	HU3CP HOSE UNION (CHROME)	814176	5013866056802	01/09/2003	To Current	£0.00
5	HU1CP HOSE UNION (CHROME)	814146	5013866056734	01/09/2003	To Current	£0.00
5	HU1 HOSE UNION - DISCONTINUED	814140	5013866056703	01/01/1900	10/04/2009	£0.00
5	HU3 HOSE UNION	814143	5013866056727	01/09/2003	To Current	£0.00

Spare Key	Description	Code	Barcode	Date From	Date To	Price (£) ex VAT
			6			
6	K2 LOCKSHIELD KEY	817020	5013866058448	01/01/1900	To Current	£11.64

Spare Key	Description	Code	Barcode	Date From	Date To	Price (£) ex VAT
			7			
7	LS24 LOCKSHIELD	817034	5013866058462	01/01/1900	To Current	£0.00