

Selector switch, 1N/O, 2 positions, front mount

Part no. M22-WRK/K10
Article no. 216518

Catalog No. M22-WRK-K10Q

Powering Business Worldwide

Delivery programme

Product range	RMQ-Titan (drilling dimensions 22.5 mm)
Basic function	Selector switch actuators
Single unit/Complete unit	Complete unit
Description	Thumb-gripcolour black Stay-put/spring-return function, can be changed with coding parts M22-XC-Y
Function	2 positions, maintained
Function	Stay-put
Contacts	
N/O = Normally open	1 N/O
Contact sequence	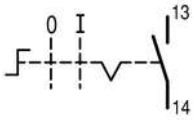
Front ring	Bezel: Silver
Connection to SmartWire-DT	no

Notes

Switch positions 0, I and II correspond with the position of the actuator as viewed from the front.

Approvals

Product Standards	IEC/EN 60947-5; UL 508; CSA-C22.2 No. 14-05; CSA-C22.2 No. 94-91; CE marking
UL File No.	E29184
UL Category Control No.	NKCR
CSA File No.	012528
CSA Class No.	3211-03
North America Certification	UL listed, CSA certified
Degree of Protection	UL/CSA Type 3R, 4X, 12, 13

General

Standards			IEC/EN 60947 VDE 0660
Lifespan, mechanical	Operations	x 10^6	> 0.1
Operating frequency	Operations/h		≦ 2000
Operating torque (screw terminals)		Nm	≦ 0.3
Protection type			IP66
Climatic proofing			Damp heat, constant, to IEC 60068-2-78 Damp heat, cyclic, to IEC 60068-2-30
Ambient temperature		°C	
Open		°C	- 25 - + 70
Mounting position			As required
Mechanical shock resistance		g	30 Shock duration 11 ms Sinusoidal according to IEC 60068-2-27

Technical data ETIM 5.0

Low-voltage industrial components (EG000017) / Selector switch, complete (EC001029)
Electric engineering, automation, process control engineering / Low-voltage switch technology / Command and alarm device / Selector switch, complete unit (ecl@ss8-27-37-12-43 [ACN984007])

Number of switch positions		2
Type of control element		Toggle
Suitable for illumination		No
With lamp		No
Colour button		Black
Hole diameter	mm	22
Width opening	mm	0
Height meter opening	mm	0
Switching function latching		Yes
Spring-return		No
Degree of protection (IP)		IP66
Supply voltage	V	0 - 0

Number of contacts as normally open contact	1
Number of contacts as normally closed contact	0
Number of contacts as change-over contact	0
Type of electric connection	Screw connection
With front ring	Yes
Material front ring	Plastic
Colour front ring	Chrome

Dimensions

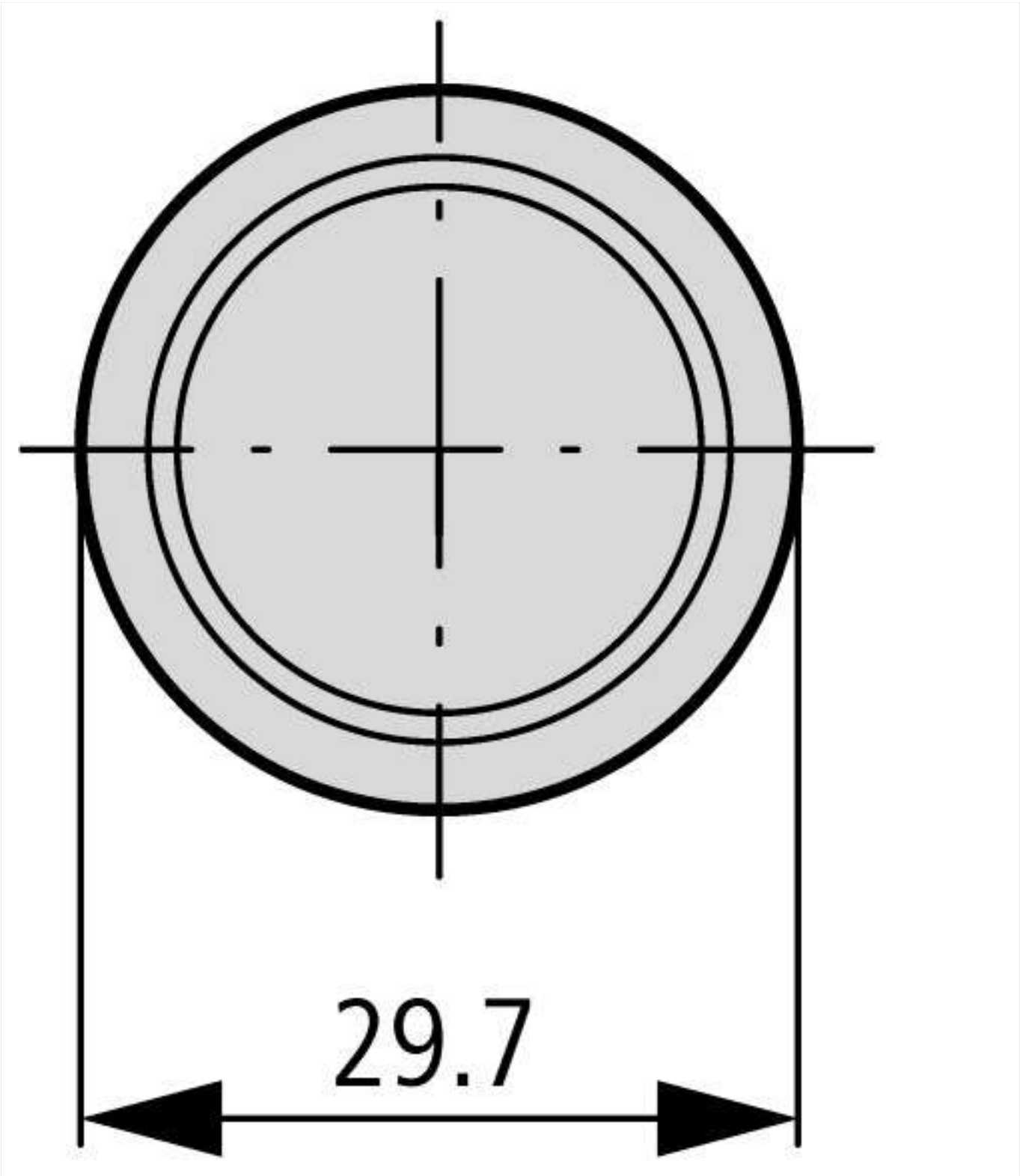

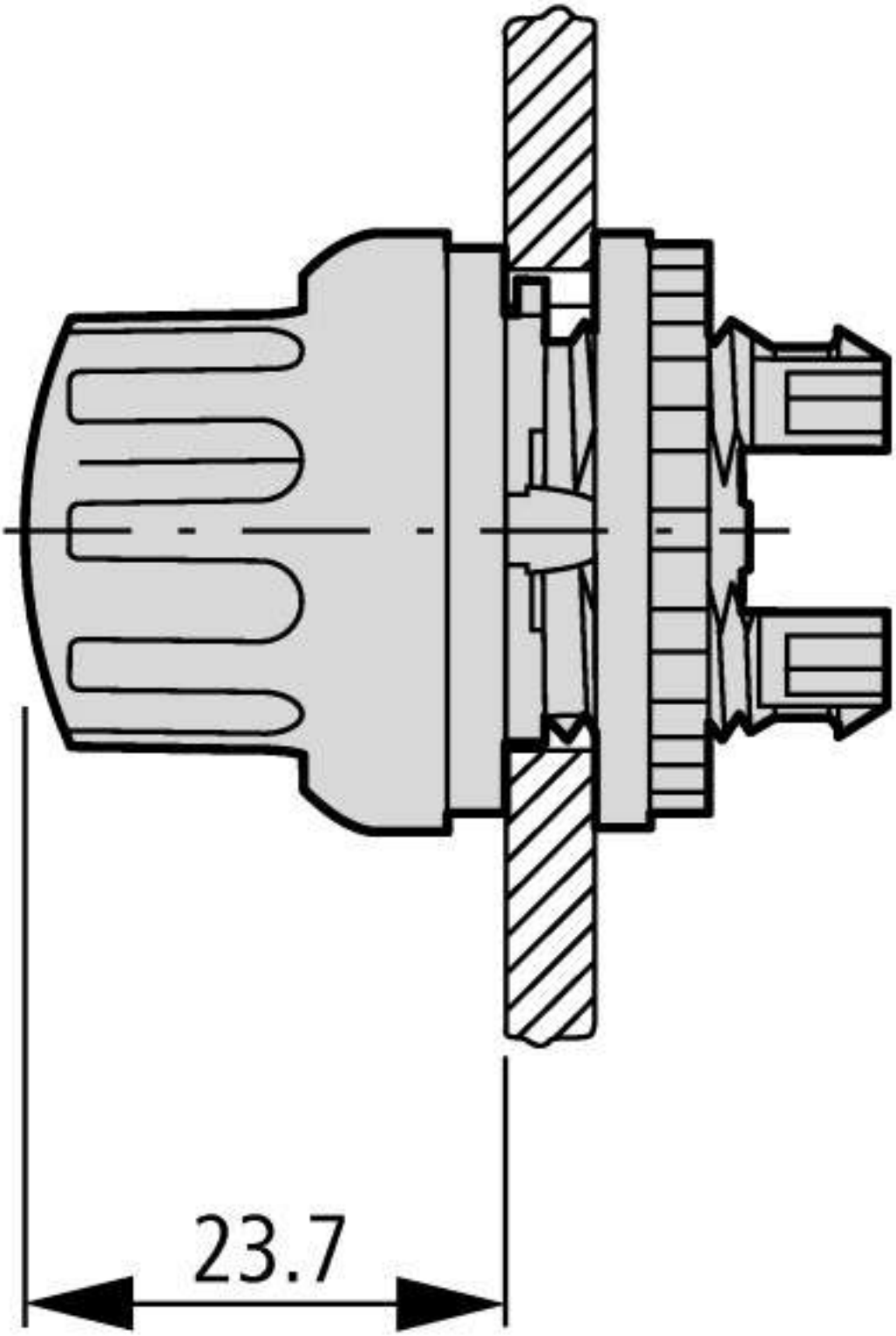

Additional product information (links)

IL04716002Z (AWA1160-1745) RMQ-Titan System

IL04716002Z (AWA1160-1745) RMQ-Titan System	ftp://ftp.moeller.net/DOCUMENTATION/AWA_INSTRUCTIONS/IL04716002Z2013_08.pdf

© 04/2014 by Eaton Industries GmbH