DI5028

Compact evaluation unit for speed monitoring

DFK36,5-WRKG/IO/US

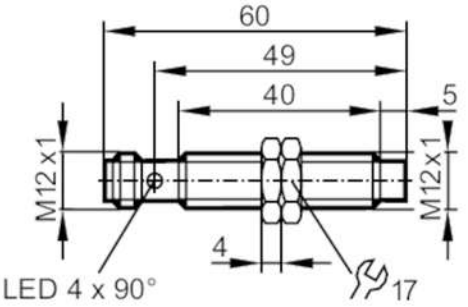

Product characteristics		
Electrical design		PNP/NPN
Output function		normally open / normally closed; (parameterisable)
Sensing range	[mm]	6.5
Communication interface		IO-Link
Housing		threaded type
Dimensions	[mm]	M12 x 1 / L = 60
Application		
Application		simple evaluation of rotating and linear movement with regard to underspeed; blocking
Electrical data		
Nominal voltage DC	[V]	10...30
Current consumption	[mA]	< 10
Protection class		III
Reverse polarity protection		yes
Outputs		
Electrical design		PNP/NPN
Output function		normally open / normally closed; (parameterisable)
Max. voltage drop switching output DC	[V]	2.5
Permanent current rating of switching output DC	[mA]	100
Short-circuit proof		yes
Overload protection		yes
Detection zone		
Sensing range	[mm]	6.5
Sensing range adjustable		no
Operating distance	[mm]	0...5.26
Measuring/setting range		
Setting range	[Imp/min]	5...24000
Measuring principle		inductive
Accuracy / deviations		
Correction factor		steel: 1 / stainless steel: 0.7 / brass: 0.5 / aluminium: 0.4 / copper: 0.3

DI5028

Compact evaluation unit for speed monitoring

DFK36,5-WRKG/IO/US

Hysteresis	[% of Sr]	10	
Response times			
Start-up delay	[s]	0...30; (In steps of: 100 ms; Default: 15 s)	
Max. damping frequency	[Imp/min]	30000	
Interfaces			
Communication interface		IO-Link	
Operating conditions			
Ambient temperature	[°C]	-40...85	
Storage temperature	[°C]	-25...85	
Protection		IP 66; IP 67; IP 68; IP 69K	
Tests / approvals			
EMC		EN 61000-4-2 ESD	4 kV CD / 8 kV AD
		EN 61000-4-3 HF radiated	10 V/m
		EN 61000-4-4 Burst	2 kV
		EN 61000-4-6 HF conducted	10 V
		EN 55011	class B
		EN 60947-5-2	
Shock resistance		EN 60068-2-27 Ea	100 g 11 ms half-sine; 3 shocks each in every direction of the 3 coordinate axes
Vibration resistance		DIN EN 60947-5-2	20 g (10...3000 Hz)
			50 sweep cycles, 1 octave per minute, in 3 axes
MTTF	[years]	672	
UL approval		UL Approval no.	A008
Mechanical data			
Weight	[g]	27	
Housing		threaded type	
Mounting		non-flush mountable	
Dimensions	[mm]	M12 x 1 / L = 60	
Thread designation		M12 x 1	
Materials		housing: brass white bronze coated; sensing face: PBT orange; LED window: PEI; lock nuts: brass white bronze coated	
Tightening torque	[Nm]	7	
Displays / operating elements			
Display		SIO mode	
		output stage supplied with current	4 x LED, yellow
		IO-Link mode	
		target in measuring range	4 x LED, yellow
		target outside measuring range	4 x LED, yellow flashing
Accessories			
Items supplied		lock nuts: 2	

DI5028

Compact evaluation unit for speed monitoring

DFK36,5-WRKG/IO/US

Electrical connection

Connector: 1 x M12; coding: A

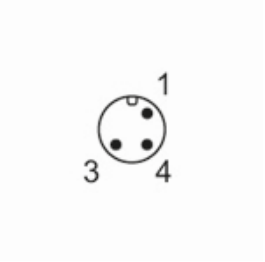

Connection



4: OUT / IO-Link