BOS 5K-PU-LH12-S75
Ordering code: BOS01JK

Diffuse sensor
Series 5K
Working Range: 20...300 mm

PNP (1x), antivalent
Laser red light, Laserklasse 1
DC, direct current

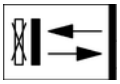



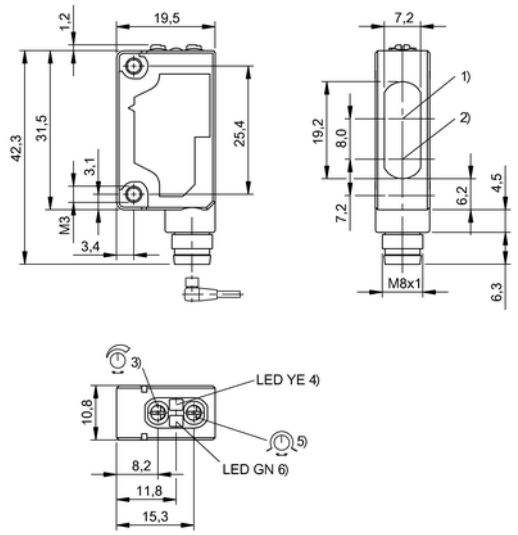

1) Optical axis receiver, 2) Optical axis emitter, 3) Sn, 4) Output function, 5) Light-on / Dark-on, 6) Stability

Characteristic data

Operating voltage	10...30 V DC
Connection	Connector, M8x1-S75
Switching freq. f max.	2000 Hz
Short-circuit protected	yes
Protected against polarity reversal	yes
Enclosure Type per IEC 60529	IP67
Indicator	Output function - LED YE Stability - LED GN
Adjuster	Potentiometer 270° (1x)/Potentiometer 6-turn (1x)
Setting	Light-on/dark-on Switching distance (Sn)

Optical data

Principle of optical operation	Light scanner, triangulation
Switching function, optical	NO/NC: light-on/dark-on
Light spot size, typical	0.2 mm x 0.3 mm at focal point
Light type	Laser red light
Wavelength	650 nm
Ambient light max.	5,000 Lux
Laser class per IEC 60825-1	1
Average power Po max.	< 390 µW (IEC 60825-1)
Optical special feature	Background suppression

Electrical data

Rated operating voltage Ue DC	24,0 V
Effective operating current Ie	100 mA
Ripple max. (% of Ue)	10
Switching output	PNP (1x)
Switching function	NO/NC
Turn-off delay toff max.	0,25 ms
Turn-on delay ton max.	0,25 ms
No-load current max. Io at Ue	35 mA
Voltage drop Ud max. (at Ie)	1,5 V

Mechanical data

Eff. switching distance Sr	300 mm
Capture range Sd	20...300 mm
Beam characteristic	Focus typ. at 260 mm
Range Sn	Sn = 300 mm, adjustable
Minimum operating distance	20 mm
Dist. dev. 18% max. (% of Sr)	8 %
Connector type	M8x1-S75
Sensing surface material	PMMA
Housing material	PC, PBT
Mounting type	Screw M3
Design	Block, 90° connection
Ambient temperature	-10...55 °C

Basic data

Basic standard	IEC 60947-5-2

The sensor is functional again after the overload has been eliminated.
Reference object (target): Gray card, 100 x 100 90 % remission, axial approach.
To meet EMC requirements according EN 60947-5-2 the mounting bracket must not be grounded.
Only for NFPA 79 applications (machines with a supply voltage of maximum 600 volts). Device shall be connected only by using any R/C (CYJV2) cord, having suitable ratings.
For additional information, refer to user's guide.
Order accessories separately.
For use as UL listed product the Ambient temperature Ta max. may not exceed the value of 50°C.

BOS 5K-PU-LH12-S75
Ordering code: BOS01JK

BALLUFF
sensors worldwide

Diffuse sensor
Series 5K
Working Range: 20...300 mm

PNP (1x), antivalent
Laser red light, Laserklasse 1
DC, direct current

LISTED IND. CONT. EQ. 31MY
for use in the secondary of a class 2 source of supply

