TI01618C/07/EN/01.21
71538068
2021-08-30

Technical Information
Memosens CPS97E

ISFET sensor for pH measurement



Digital with Memosens 2.0 technology

Application

- Contaminated media:
  - Solids
  - Emulsions
  - Precipitation reactions
- Process applications with:
  - Rapidly changing pH values
  - Varying temperatures and pressures
- Water treatment and wastewater

With the following approvals for use in hazardous areas Zone 0, Zone 1 and Zone 2: ATEX, IECEx, CSA C/US, NEPSI, JPN Ex, INMETRO, UKCA and Korea Ex.

Your benefits

- Break-resistant
- Reference system: open junction and stabilized, hard gel
- Can be used in particle-laden media with a high dirt load
- Longer calibration intervals than with glass electrodes
  - Shorter hysteresis in event of temperature change
  - Smaller measuring error following exposure to high temperatures
  - Virtually no acid and alkaline errors
- Integrated Pt1000 temperature sensor for effective temperature compensation

Other advantages provided by Memosens technology

- Maximum process safety thanks to non-contact, inductive signal transmission
- Data security thanks to digital data transmission
- Very easy to use as sensor data are saved in the sensor
- Predictive maintenance can be performed by recording sensor load data in the sensor

Endress+Hauser
People for Process Automation

Function and system design

Measuring principle

Ion-**selective**, or more generally, ion-**sensitive** field effect transistors (ISFET) were developed in the 1970s as an alternative to glass electrodes for pH measurement.

pH measurement with ISFET sensors

Ion-selective field effect transistors are based on an MOS [1] transistor arrangement → 🖼 1, 🖹 2, but without the metal gate (item 1) as the control electrode. Instead, in the ISFET sensor, the medium (item 3) → 🖼 2, 🖹 2 is in direct contact with the gate insulator layer (item 2). Two highly p-conducting regions are diffused into the n-conducting substrate (item 5) of the semi-conductor (Si). They act as the charge-supplying electrode ("Source", S) and the charge-accepting electrode ("Drain", D). The metal gate electrode (in the case of the MOSFET) and the medium (in the case of the ISFET) forms a capacitor with the underlying substrate. A difference in potential (voltage) between the gate and substrate (U_{GS}) increases the electron density in the area between the "Source" and "Drain". A conductive channel → 🖼 2, 🖹 2(item 4) forms, such that a current I_D flows when a voltage U_D is applied.

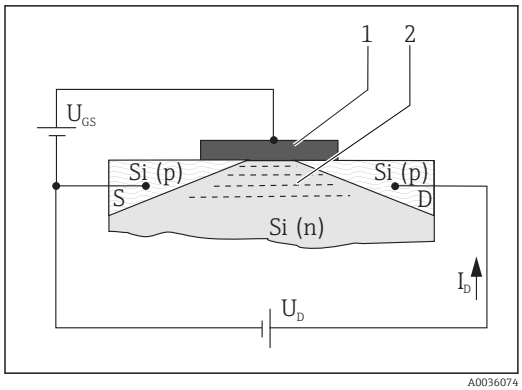

🖼 1 *MOSFET principle*

1 *Metal gate*
2 *Conductive channel (N-conducting)*

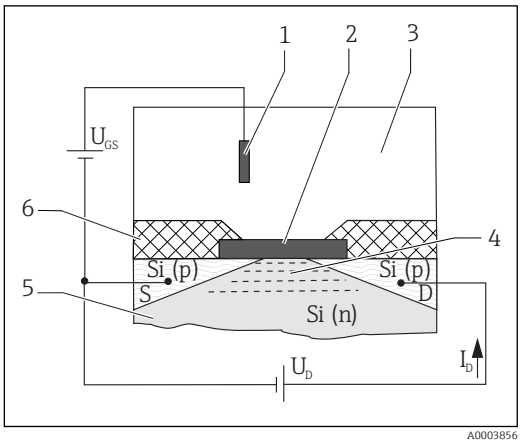

🖼 2 *ISFET principle*

1 *Reference electrode*
2 *Gate insulator layer*
3 *Medium*
4 *Conductive channel (N-conducting)*
5 *N-doped silicon substrate*
6 *Sensor shaft*

With the ISFET, ions that are in the medium and located in the boundary layer between the medium/gate insulator generate the electric field (gate potential). The effect described above causes a conductive channel to form in the silicon semi-conductor substrate between the "Source" and "Drain", and causes current to flow between the "Source" and "Drain".

Suitable sensor circuits use the dependence of the ion-selective gate potential to generate an output signal that is proportional to the concentration of the ion type.

pH-selective ISFET

The gate insulator acts as an ion-selective layer for H^+ ions. While the gate insulator is also impermeable to these ions (insulator effect), it allows reversible surface reactions with H^+ ions. Depending on the acidic or alkaline character of the medium, functional groups in the insulator surface either accept or donate H^+ ions (amphoteric character of the functional groups). This results in positive charging at the insulator surface (H^+ ions accepted in the acidic medium) or negative charging at the insulator surface (H^+ ions donated in the alkaline medium). Depending on the pH value, a defined surface charge can be used to control the field effect in the channel between the "Source" and "Drain". The processes which lead to the creation of a charge potential and therefore to a control voltage U_{GS} between the "Gate" and "Source" are described by the Nernst equation:

$$U_{GS} = U_0 + \frac{2.3 \cdot RT}{nF} \cdot \lg a_{ion}$$

1) Metal oxide semiconductor

U_{GS}	Potential between gate and source	F	Faraday constant (26.803 Ah)
U_0	Offset voltage	a_{ion}	Activity of ion type (H^+)
R	Gas constant (8.3143 J/molK)	$\frac{2.3 \cdot RT}{nF}$	Nernst factor
T	Temperature [K]		
n	Valency (1/mol)		

At 25 °C (77 °F) the Nerst factor of the pH measurement has the value -59.16 mV/pH.

Measuring system

A complete measuring system comprises at least:
- ISFET sensor
- Memosens data cable CYK10
- Transmitter, e.g. Liquiline CM44x, Liquiline CM42
- Assembly
  - Immersion assembly, e.g. Dipfit CPA111
  - Flow assembly, e.g. Flowfit CPA250
  - Retractable assembly, e.g. Cleanfit CPA871
  - Permanent installation assembly, e.g. Unifit CPA842

Additional options are available depending on the application:
Automatic cleaning and calibration system, e.g.. Liquiline Control CDC90

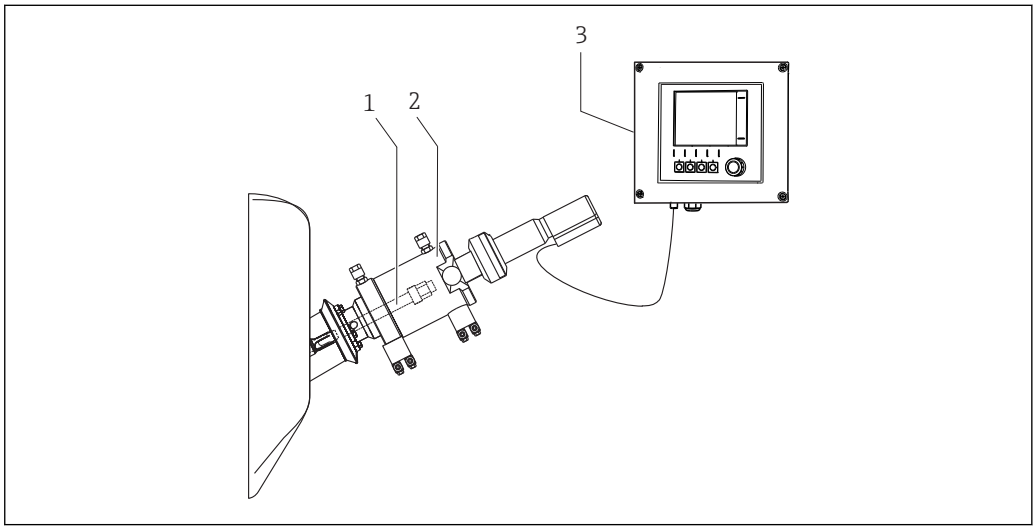

3 Measuring system

1 ISFET sensor
2 Retractable assembly CPA871
3 Liquiline M CM42 transmitter

Communication and data processing

Communication with the transmitter

Always connect digital sensors with Memosens technology to a transmitter with Memosens technology. Data transmission to a transmitter for analog sensors is not possible.

Digital sensors can store measuring system data in the sensor. This includes the following:
- Manufacturer data
  - Serial number
  - Order code
  - Date of manufacture
- Calibration data
  - Calibration date
  - Slope at 25 °C (77 °F)
  - Operating point at 25 °C (77 °F)
  - Offset of integrated temperature sensor
  - Number of calibrations
  - Calibration history
  - Serial number of the transmitter used to perform the last calibration or adjustment
- Operating data
  - Temperature application range
  - pH application range
  - Date of initial commissioning
  - Maximum temperature value
  - Hours of operation under extreme conditions
  - CIP counter
  - Sensor load

The data listed above can be displayed with the Liquiline CM42, CM44x, and Memobase Plus CYZ71D.

Dependability

Reliability

Easy handling

Sensors with Memosens technology have integrated electronics that store calibration data and other information (e.g. total hours of operation or operating hours under extreme measuring conditions). Once the sensor has been connected, the sensor data are transferred automatically to the transmitter and used to calculate the current measured value. As the calibration data are stored in the sensor, the sensor can be calibrated and adjusted independently of the measuring point. The result:
- Easy calibration in the measuring lab under optimum external conditions increases the quality of the calibration.
- Pre-calibrated sensors can be replaced quickly and easily, resulting in a dramatic increase in the availability of the measuring point.
- Thanks to the availability of the sensor data, maintenance intervals can be accurately defined and predictive maintenance is possible.
- The sensor history can be documented on external data carriers and evaluation programs.
- The saved application data of the sensor can be used to determine the continued use of the sensor in a targeted manner.

Integrity

Data security thanks to digital data transmission

Memosens technology digitizes the measured values in the sensor and transmits the data to the transmitter via a non-contact connection that is free from potential interference. The result:
- If the sensor fails or there is an interruption in the connection between the sensor and transmitter, this is reliably detected and reported.
- The availability of the measuring point is reliably detected and reported.

Security

Maximum process safety
With inductive transmission of the measured value using a non-contact connection, Memosens guarantees maximum process safety and offers the following benefits:
- All problems caused by moisture are eliminated:
  - No corrosion at the connection
  - Measured values cannot be distorted by moisture
- The transmitter is galvanically decoupled from the medium. Issues concerning "symmetrical high-impedance" or "asymmetry" or the type of impedance converter are a thing of the past.
- Electromagnetic compatibility (EMC) is guaranteed by screening measures for the digital transmission of measured values.
- Intrinsically safe electronics mean operation in hazardous areas is not a problem. Complete flexibility thanks to individual Ex approvals for all components, such as sensors, cables and transmitters.

Input

Measured variable

pH value

Temperature

Measuring range

- pH: 0 to 14 pH
- Temperature: –15 to 110 °C (5 to 230 °F)

Pay attention to the operating conditions in the process.

Power supply

Electrical connection

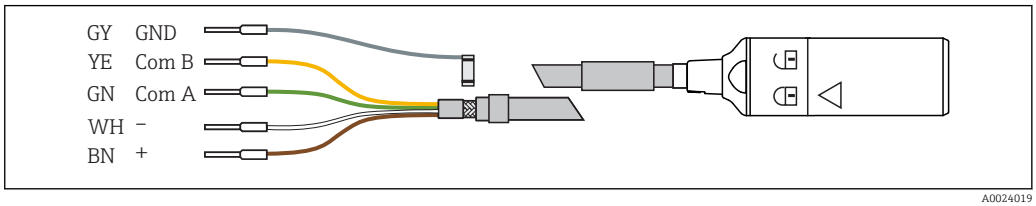

4 *Measuring cable CYK10 or CYK20*

▶ Connect the Memosens measuring cable, e.g. CYK10 or CYK20 to the sensor.

For further information on cable CYK10, see BA00118C

Performance characteristics

Reference operating conditions

Reference temperature:	25 °C (77 °F)
Reference pressure:	1013 hPa (15 psi)

Reference system

Ag/AgCl reference lead, stabilized bridging electrolyte gel

Hysteresis

Another important advantage over pH glass electrodes is the lower acid or alkaline errors in extreme pH ranges. In contrast to the pH glass electrode, almost no foreign ions can build up at the ISFET gate. Between pH 1 and pH 13, the measured error averages Δ pH 0.02 (at 25 °C (77 °F)) and is therefore at the detection limit.

The following graphic shows the average measured error of the ISFET sensor in the pH 1 to 13 range and compared with two pH glass electrodes (two different pH glasses) at the extreme values of pH 0.09 (1 M HCl) and 13.86 (1 M NaOH).

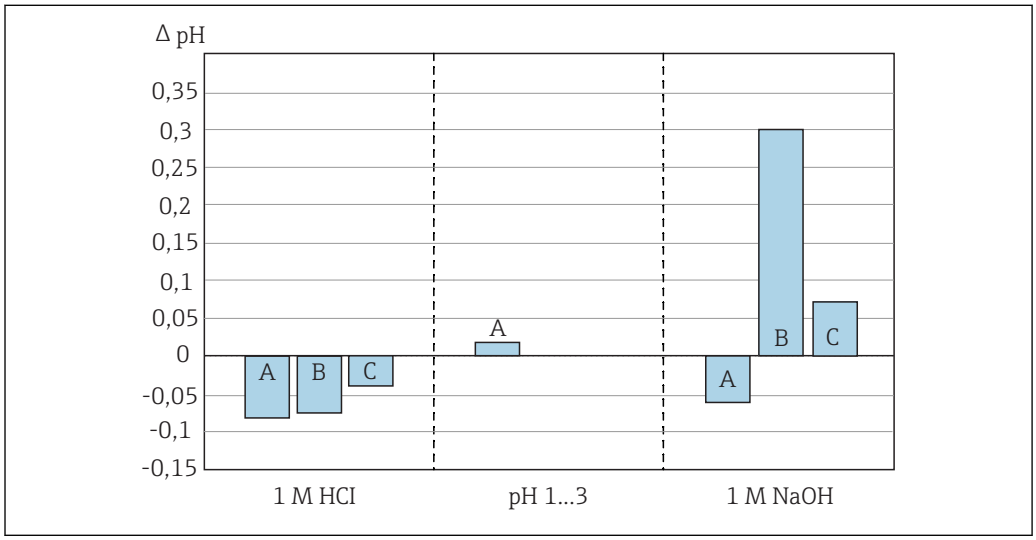

5 Measured errors of the ISFET sensor compared to different pH sensors

A ISFET CPSx7D
B Glass type A
C Glass type B

Repeatability

± 0.01 pH

Response time

A closed-control loop is created each time the measuring system is switched on. The measured value adjusts to the real value during this time.

The settling time depends on the type and duration of the interruption:
- Voltage interruption, sensor remains in the medium: 3-5 minutes
- Interruption of the film of liquid between the ISFET and reference: 5-8 minutes
- Dry storage of the sensor for an extended period: up to 30 minutes

Response time

The response times of the sensor are extremely short over the entire temperature range. There is no (temperature-dependent) equilibrium setting. This means it can also be used at low temperatures without a deceleration in the response time.

Response time t_{90}

t < 5 seconds, for a buffer change from pH 4 to pH 7 and under reference operating conditions

The response of the integrated temperature sensor can be slower in the event of extreme temperature changes. In this case, regulate the temperature of the sensor before a calibration or measurement.

Installation

Orientation

NOTICE

Open junction

Gel can escape from the sensor interior and resulting air bubbles can break the electrical contact!
- ▶ Exercise care when handling the sensor.
- ▶ Align the sensor at an optimum angle to the direction of flow.

1. Note the direction of medium flow when installing the sensor.
2. Position the ISFET chip so that it is at an angle of approx. 30 to 45 ° to the direction of flow (item 2) → 7, 7. Use the rotatable plug-in head for this purpose.

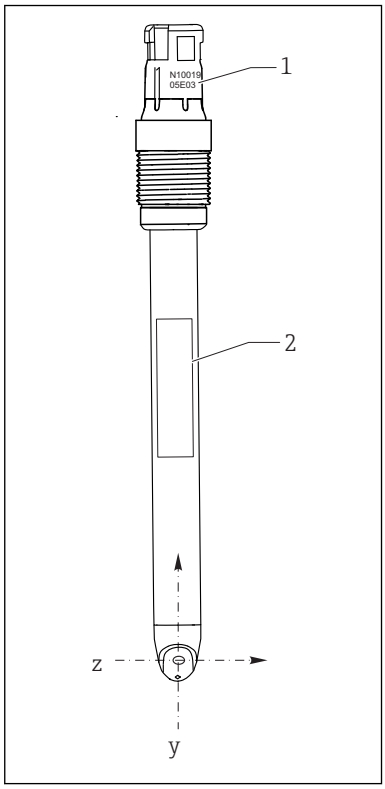

6 *Sensor orientation, front view*

1 *Serial number*
2 *Nameplate*

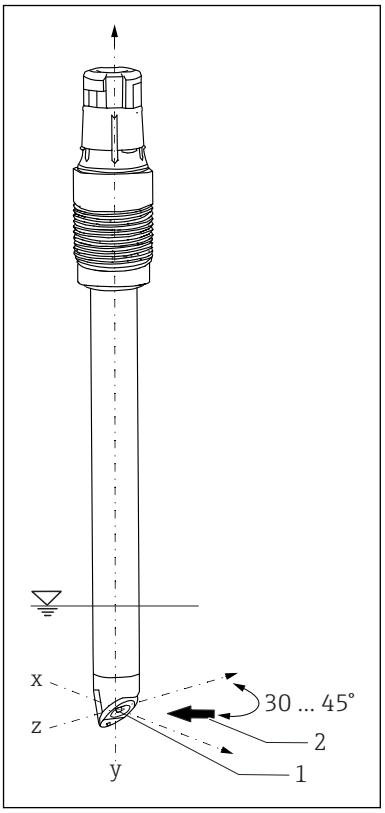

7 *Sensor orientation, 3D view*

1 *ISFET chip*
2 *Direction of medium flow*

When installing the sensor in an assembly, the serial number engraved on the plug-in head can be used as a guide when aligning the sensor → 6, 7. The engraving is always on the same plane as the ISFET chip and the nameplate (z-y direction).

ISFET sensors are not designed for use in abrasive media. If these sensors are nevertheless used in such applications, avoid direct flow to the chip. This increases the sensor operating life and improves the sensor drift behavior. The disadvantage is that the pH value displayed is not stable.

ISFET sensors can be installed in any position because there is no liquid internal lead. However, if installed upside down, the possibility of an air bubble in the reference system interrupting the electrical contact between the medium and the reference cannot be ruled out.

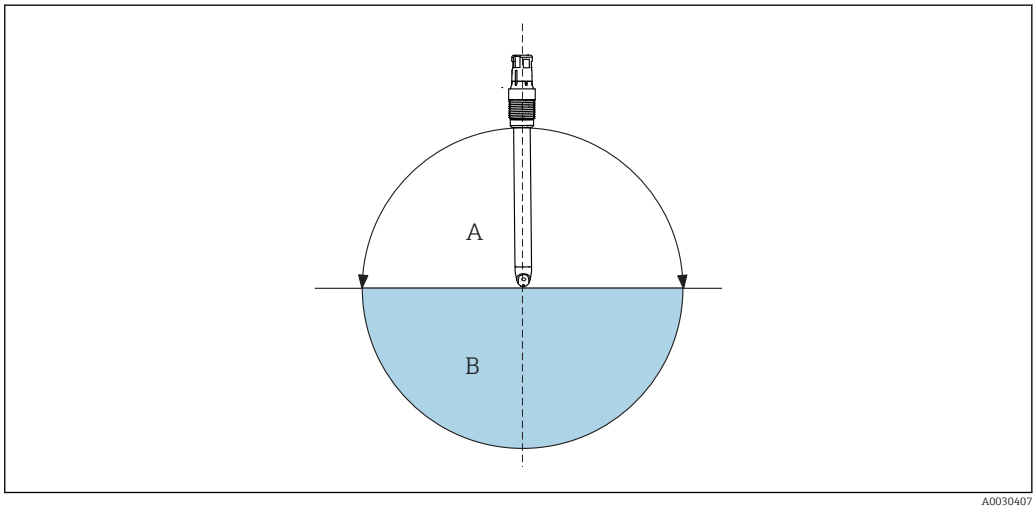

8 *Angle of installation*

A *Recommended*
B *Permitted, pay attention to basic conditions* → 7

Basic conditions: The sensor is delivered from the factory free of air bubbles. Air bubbles occur, however, when working with a vacuum, e.g. when emptying a tank.

Leave the installed sensor in dry conditions for a maximum of 6 hours (also applies to upside-down installation).

Installation instructions

For detailed installation instructions for the assembly: refer to the Operating Instructions of the assembly used.

1. Before screwing in the sensor, make sure the assembly thread, the O-rings and the sealing surface are clean and undamaged and that the thread runs smoothly.
2. Screw in the sensor and tighten by hand with a torque of 3 Nm (2.21 lbf ft) (specifications only apply if installing in Endress+Hauser assemblies).

For detailed information on removing the wetting cap, see BA02154C

Environment

Atmospheric temperature range

NOTICE

Risk of damage from frost!

▶ Do not use the sensor at temperatures below .

Storage temperature

0 to 50 °C (32 to 122 °F)

Sensitivity to light

NOTICE

Direct sunlight during calibration and operation

Measured value fluctuations!

▶ Avoid direct sunlight during calibration and operation.

Like all semiconductor components, the ISFET chip is sensitive to light. Normal ambient light does not have any significant effect on the measurement.

Degree of protection

IP 68 (10 m (33 ft) water column, 25 °C (77 °F), 45 days, up to 135 °C (275 °F)) autoclavable

Electromagnetic compatibility (EMC)

Interference emission and interference immunity as per

- EN 61326-1:2013
- EN 61326-2-3:2013
- NAMUR NE21: 2012

Process

Process temperature range

−15 to 110 °C (5 to 230 °F)

Medium temperature depending on the pH value

At high temperatures, alkalis can irreversibly damage the gate insulator oxide over the longer term. The sensor can only be used in the marked range (→ 9, 9) to the detriment of the sensor operating life. If permanently exposed to 1 molar NaOH at temperatures over 65 °C (149 °F), the sensor operating life is reduced to such an extent that permanent operation in this range is not recommended.

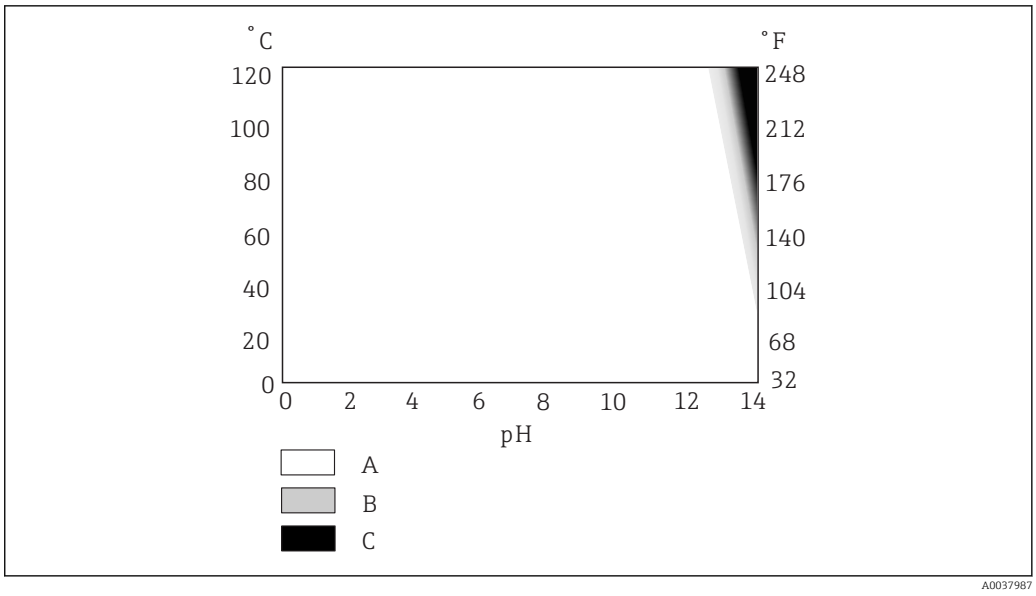

9 *Area of application depending on the temperature and pH value*

A Can be used without any problems
B Limited operating life
C Use not recommended

Process pressure range

0.8 to 11 bar (11.6 to 159.5 psi) (absolute)

Conductivity

Minimum conductivity [2]: > 500 µS/cm

Pressure/temperature ratings

NOTICE

Risk of damage to the sensor!

▶ Never use the sensor outside of the listed specifications.

Maximum 11 bar (160 psi) (absolute) / 100 °C (212 °F)

2) Reference conditions: Demineralized water as the measuring medium whose conductivity has been adjusted with NaOH, KCI or HCI; room temperature; umpressurized sensor operation; change between stationary medium and flow of medium to the sensor with 2 m/s (6.6 ft/s) fluid velocity with lateral medium flow in the direction of the ISFET chip; the conductivity value indicated is the value determined when the measured value changes by less than 0.2 pH in all media between stationary media and flowing media.

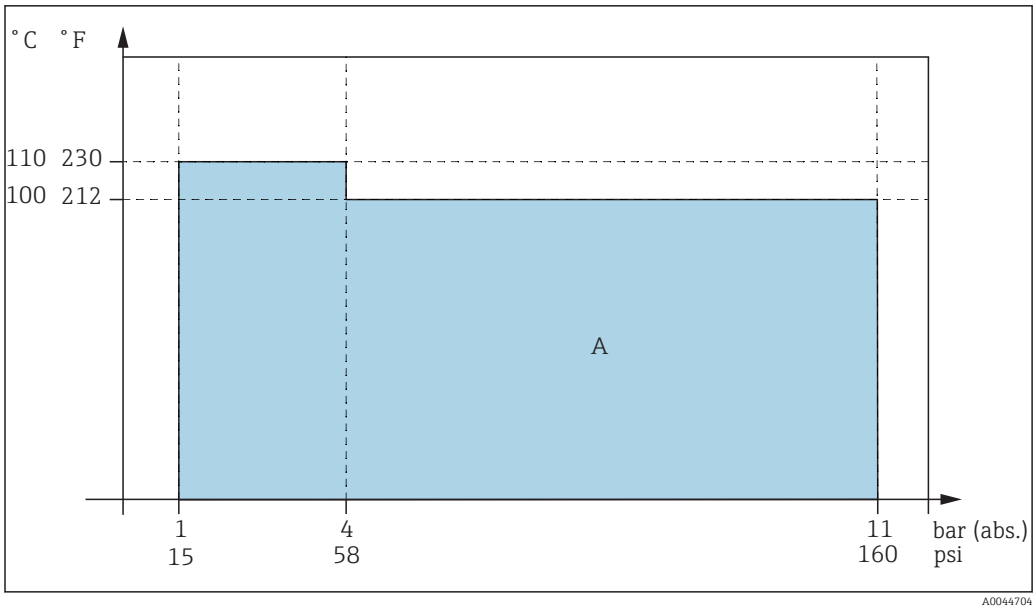

10 Pressure/temperature rating

A ISFET range of application

Mechanical construction

Design, dimensions

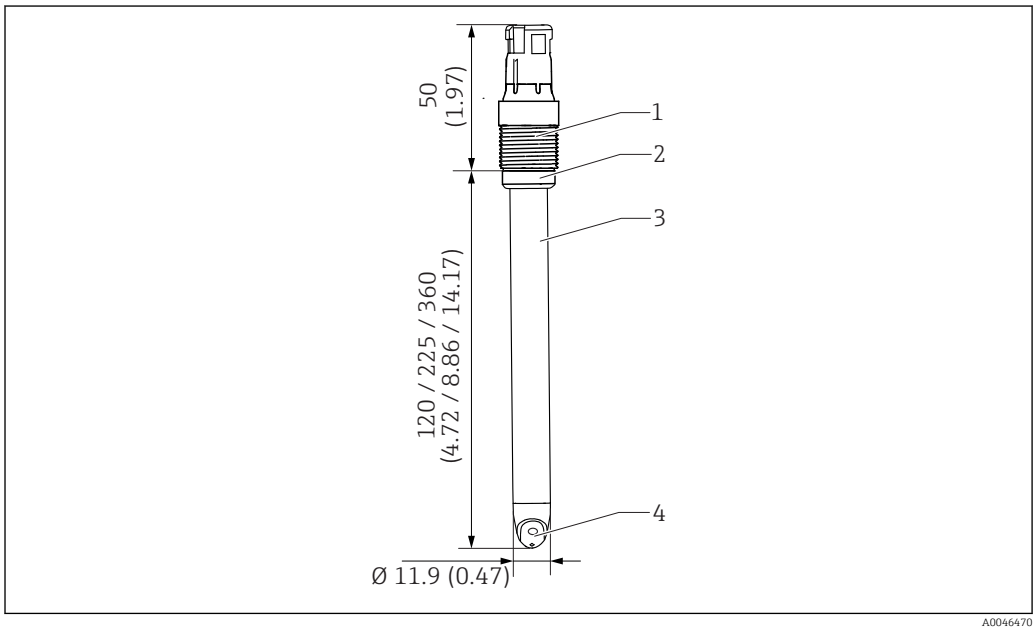

11 Sensor with Memosens plug-in head. Engineering unit: mm (in)

1 Memosens plug-in head with process connection
2 O-ring with thrust collar
3 Sensor shaft
4 ISFET chip

Weight

Installed length	120 mm (4.72 in)	225 mm (8.86 in)	360 mm (14.17 in)
Weight	35 g (1.2 oz)	50 g (1.8 oz)	66 g (2.3 oz)

Materials

Sensor shaft	PEEK
Seals	FFKM

Metal lead	Ag/AgCl
O-ring on thrust collar	FKM
Junction or open junction	open junction
Process coupling	PPS, fiberglass-reinforced
Nameplate	ceramic metal oxide

Resistance to breaking

The sensor's resistance to breaking is its most distinctive external feature. The entire sensor technology is embedded in a PEEK shaft. Only the highly durable ISFET chip and the reference are in direct contact with the medium.

Temperature sensor

Pt1000 (Class A according to DIN IEC 60751)

Plug-in head

Memosens plug-in head for digital, non-contact data transmission, pressure resistance 16 bar (232 psi) (relative)

Process connections

Pg 13.5

Surface roughness

R_a < 0.76 µm (30 µin)

Certificates and approvals

Current certificates and approvals for the product are available via the Product Configurator at www.endress.com.

1. Select the product using the filters and search field.
2. Open the product page.

The **Configuration** button opens the Product Configurator.

Ordering information

Scope of delivery

The delivery comprises:
- Sensor in the version ordered
- Operating Instructions
- Safety instructions for the hazardous area (for sensors with Ex approval)

Product page

www.endress.com/cps97e

Product Configurator

On the product page there is a **Configure** button to the right of the product image.

1. Click this button.
   ↳ The Configurator opens in a separate window.
2. Select all the options to configure the device in line with your requirements.
   ↳ In this way, you receive a valid and complete order code for the device.
3. Export the order code as a PDF or Excel file. To do so, click the appropriate button on the right above the selection window.

For many products you also have the option of downloading CAD or 2D drawings of the selected product version. Click the **CAD** tab for this and select the desired file type using picklists.

Accessories

The following are the most important accessories available at the time this documentation was issued.

▶ For accessories not listed here, please contact your Service or Sales Center.

Device-specific accessories

Assemblies

Dipfit CPA111
- Immersion and installation assembly made of plastic for open and closed vessels
- Product Configurator on the product page: www.endress.com/cpa111

Technical Information TI00112C

Cleanfit CPA871
- Flexible process retractable assembly for water, wastewater and the chemical industry
- For applications with standard sensors with 12 mm diameter
- Product Configurator on the product page: www.endress.com/cpa871

Technical Information TI01191C

Cleanfit CPA875
- Retractable process assembly for sterile and hygienic applications
- For in-line measurement with standard sensors with 12 mm diameter, e.g. for pH, ORP, oxygen
- Product Configurator on the product page: www.endress.com/cpa875

Technical Information TI01168C

Cleanfit CPA450
- Manual retractable assembly for installing sensors with a diameter of 12 mm and a length of 120 mm in tanks and pipes
- Product Configurator on the product page: www.endress.com/cpa450

Technical Information TI00183C

Flowfit CPA250
- Flow assembly for pH/ORP measurement
- Product Configurator on the product page: www.endress.com/cpa250

Technical Information TI00041C

Unifit CPA842
- Installation assembly for food, biotechnology and pharmaceutics
- With EHEDG and 3A certificate
- Product Configurator on the product page: www.endress.com/cpa842

Technical Information TI00306C

Cleaning and calibration system

Liquiline Control CDC90
- Fully automatic cleaning and calibration system for pH and ORP measuring points in all industries
- Cleaned, validated, calibrated and adjusted
- Product Configurator on the product page: www.endress.com/cdc90

Technical Information TI01340C

Buffer solutions

High-quality buffer solutions from Endress+Hauser - CPY20
The secondary buffer solutions have been referenced to primary reference material of the PTB (German Federal Physico-technical Institute) or to standard reference material of NIST (National Institute of Standards and Technology) according to DIN 19266 by a laboratory accredited by the DAkkS (German accreditation body) according to DIN 17025.
Product Configurator on the product page: www.endress.com/cpy20

Measuring cable

Memosens data cable CYK10
- For digital sensors with Memosens technology
- Product Configurator on the product page: www.endress.com/cyk10

Technical Information TI00118C

Memosens laboratory cable CYK20
- For digital sensors with Memosens technology
- Product Configurator on the product page: www.endress.com/cyk20

Handheld instrument

Liquiline Mobile CML18
- Multiparameter mobile device for laboratory and field
- Reliable transmitter with display and app connection
- Product Configurator on the product page: www.endress.com/CML18

Operating Instructions BA02002C



www.addresses.endress.com

Endress+Hauser

People for Process Automation